Testing Evaluation Laboratories, Inc.
2002 Wood Court Suite 1 – Plant City, FL 33563
Phone: 813-754-9887

ASTM E 1886-05 / ASTM E 1996-06
Missile Level "D" (Includes Wind Zone 4)

TEST REPORT SUMMARY

Test Report Issued To:

Fleetwood Windows and Doors
1 Fleetwood Way
Corona, CA 92879

3300 GLACIER SLIDING GLASS DOORS

Title of Test	Results		
	Specimens 3, 4 and 5 240.00 x 120.00 – OXXO	Specimen 6 180.00 x 120.00 - OXO	Specimen 8 180.00 x 120.00 - OOX
Impact	Pass	Pass	Pass
Fatigue Load Cycling	+50.0/- 50.0 psf	+50.0/- 50.0 psf	+35.0/- 35.0 psf

Reference should be made to Report No. TEL 01991014 for complete test specimen description and data. For corresponding data regarding AAMA/WDMA/CSA 101/I.S./2/A440-08 *(A440S1-09)* reference should be made to Report No. TEL 01991013.

For Testing Evaluation Laboratories, Inc.

Vivian K. Wright

Vivian K. Wright,
President

Testing Evaluation Laboratories, Inc.

2002 Wood Court Suite 1 – Plant City, FL 33563
Phone: 813-754-9887

TEST RESULTS

IAS Lab Certification Number: TL-299

Report No: TEL 01991014
Test Dates: January 16. 2014 through March 18, 2014
Report Date: March 21, 2014

Issued to:

Fleetwood Windows and Doors
One Fleetwood Way
Corona, CA 92879

Project Summary: Testing Evaluation Laboratories, Inc. (TEL) was contracted by Fleetwood Windows and Doors to perform tests on the 3300 Glacier Sliding Glass Door at TEL's Plant City, FL test facility.

Test specimen descriptions and results are reported herein.

Test Specifications: **The test specimens were evaluated in accordance with the following:**
ASTM E 1886-05 / ASTM E 1996-06
Missile Level "D" (Includes Wind Zone 4)

Test Specimen Description:

Series / Model:	**3300 Glacier Sliding Glass Door**
Type:	**Aluminum Sliding Glass Doors**
Overall Size:	**240.00" x 120.00" – Specimens 3, 4 and 5 - OXXO** **180.00" x 120.00" – Specimen 6 - OXO** **180.00" x 120.00" – Specimen 8 - OOX**
Daylight Opening:	**54.75 " x 112.75" – Specimens 3, 4 and 5 (End Panels)** **54.63 " x 112.75" – Specimens 3, 4 and 5 (Center Panels)** **55.06" x 112.75" – Specimen 6 (All Panels)** **55.06" x 112.75" – Specimen 8 (All Panels)**
Glazing Detail:	**Laminated Monolithic Glass – (Specimens 3, 4 and 5)** **Insulated Laminated Glass – (Specimens 6 and 8)** **(See attached drawing for details)**
Frame Material:	**Aluminum**
Finish:	**Mill Finish**

For Tested Elevation, Vertical Cross Sections, Horizontal Cross Sections, Components, Frame Anchoring, Glazing Detail and Bill of Materials See Attached Drawing #L-7112, #L-7113. and #L-7114

IMPACT AND CYCLING TESTS

Specimen 3 – 240.0" x 120.0" Aluminum Sliding Glass Door (OXXO)

ASTM E1886-05/1996-06 – Large Missile Impact (2 x 4 Southern Yellow Pine)

Cond. Temp Of Specimen	Missile Level	Missile Weight	Missile Length	Muzzle Distance From Specimen
76°F	D	9.0 lbs, 1 oz	8'-1/4"	17'1"

Impact Location	Results	X - Measurement	Y - Measurement	Speed
1	Pass	132.0"	11.0"	49.7 fps
2	Pass	154.0"	61.0"	50.1 fps
3	Pass	211.0"	60.5"	50.1 fps
4	Pass	190.0"	10.5"	49.9 fps
5	Pass	182.0"	60.0"	49.9 fps

Orientation of Missile at Impact was within +/-5° of horizontal.
None of the impacts penetrated the specimens.
"X" measurement is from the left edge of test specimen.
"Y" measurement is from the bottom edge of test specimen.

ASTM E1886-05/1996-06– Fatigue Load Cycling **Design Pressure +50.0 psf / -50.0 psf**

Positive % of Test Load	Positive Pressure Range (psf)	Number Of Cycles	Average Cycle Time (Sec)
20% to 50%	10.0 to 25.0	3500	2.46
0% to 60%	0.0 to 30.0	300	2.49
50% to 80%	25.0 to 40.0	600	1.92
30% to 100%*	15.0 to 50.0	100	2.86

Negative % of Test Load	Negative Pressure Range (psf)	Number Of Cycles	Average Cycle Time (Sec)
30% to 100%*	15.0 to 50.0	50	2.51
50% to 80%	25.0 to 40.0	1050	1.81
0% to 60%	0.0 to 30.0	50	2.25
20% to 50%	10.0 to 25.0	3350	1.95

*Panel deflected 2.75" from original plane at 100% Positive load and 4.00" from original plane at 100% Negative load. At the completion of cycles the door panel was operable. There were no tears in the film. In our opinion, the tape and film used to seal for air leakage did not influence the results of the test.

Jarrett Wright and James Hayhurst, Test Technicians Mfg Observers – Joe Zammitt

IMPACT AND CYCLING TESTS

Specimen 4 – 240.0" x 120.0" Aluminum Sliding Glass Door (OXXO)

ASTM E1886-05/1996-06 – Large Missile Impact (2 x 4 Southern Yellow Pine)

Cond. Temp Of Specimen	Missile Level	Missile Weight	Missile Length	Muzzle Distance From Specimen
76°F	D	9.0 lbs, 1 oz	8'-1/4"	17'1"

Impact Location	Results	X - Measurement	Y - Measurement	Speed
1	Pass	132.0"	10.5"	49.9 fps
2	Pass	153.75"	61.0"	49.8 fps
3	Pass	211.25"	61.0"	50.0 fps
4	Pass	190.0"	11.0"	49.9 fps
5	Pass	181.75"	60.0"	50.1 fps

Orientation of Missile at Impact was within +/-5° of horizontal.
None of the impacts penetrated the specimens.
"X" measurement is from the left edge of test specimen.
"Y" measurement is from the bottom edge of test specimen.

ASTM E1886-05/1996-06– Fatigue Load Cycling **Design Pressure +50.0 psf / -50.0 psf**

Positive % of Test Load	Positive Pressure Range (psf)	Number Of Cycles	Average Cycle Time (Sec)
20% to 50%	10.0 to 25.0	3500	2.35
0% to 60%	0.0 to 30.0	300	2.24
50% to 80%	25.0 to 40.0	600	2.05
30% to 100%*	15.0 to 50.0	100	2.78

Negative % of Test Load	Negative Pressure Range (psf)	Number Of Cycles	Average Cycle Time (Sec)
30% to 100%*	15.0 to 50.0	50	3.00
50% to 80%	25.0 to 40.0	1050	2.06
0% to 60%	0.0 to 30.0	50	2.72
20% to 50%	10.0 to 25.0	3350	2.22

*Panel deflected 2.75" from original plane at 100% Positive load and 4.13" from original plane at 100% Negative load. At the completion of cycles the door panel was operable. There were no tears in the film. In our opinion, the tape and film used to seal for air leakage did not influence the results of the test.

Jarrett Wright and James Hayhurst, Test Technicians Mfg Observers – Joe Zammitt

IMPACT AND CYCLING TESTS

Specimen 5 – 240.0" x 120.0" Aluminum Sliding Glass Door (OXXO)

ASTM E1886-05/1996-06 – Large Missile Impact (2 x 4 Southern Yellow Pine)

Cond. Temp Of Specimen	Missile Level	Missile Weight	Missile Length	Muzzle Distance From Specimen
76°F	D	9.0 lbs, 1 oz	8'-1/4"	17'1"

Impact Location	Results	X - Measurement	Y - Measurement	Speed
1	Pass	120.50"	54.00"	49.7 fps
2	Pass	154.00"	61.00"	50.1 fps
3	Pass	175.00"	110.00"	49.8 fps
4	Pass	182.00"	62.00"	50.0 fps
5	Pass	210.00"	62.00"	50.1 fps
6	Pass	232.00"	110.00"	49.8 fps

Orientation of Missile at Impact was within +/-5° of horizontal.
None of the impacts penetrated the specimens.
"X" measurement is from the left edge of test specimen.
"Y" measurement is from the bottom edge of test specimen.

ASTM E1886-05/1996-06– Fatigue Load Cycling **Design Pressure +50.0 psf / -50.0 psf**

Positive % of Test Load	Positive Pressure Range (psf)	Number Of Cycles	Average Cycle Time (Sec)
20% to 50%	10.0 to 25.0	3500	2.44
0% to 60%	0.0 to 30.0	300	2.44
50% to 80%	25.0 to 40.0	600	2.25
30% to 100%*	15.0 to 50.0	100	2.47

Negative % of Test Load	Negative Pressure Range (psf)	Number Of Cycles	Average Cycle Time (Sec)
30% to 100%*	15.0 to 50.0	50	2.52
50% to 80%	25.0 to 40.0	1050	2.16
0% to 60%	0.0 to 30.0	50	2.15
20% to 50%	10.0 to 25.0	3350	1.80

*Panel deflected 2.63" from original plane at 100% Positive load and 3.38" from original plane at 100% Negative load. At the completion of cycles the door panel was operable. There were no tears in the film. In our opinion, the tape and film used to seal for air leakage did not influence the results of the test.

Jarrett Wright and James Hayhurst, Test Technicians Mfg Observers – Joe Zammitt

IMPACT AND CYCLING TESTS

Specimen 6 – 180.0" x 120.0" Aluminum Sliding Glass Door (OXO)

ASTM E1886-05/1996-06 – Large Missile Impact (2 x 4 Southern Yellow Pine)

Cond. Temp Of Specimen	Missile Level	Missile Weight	Missile Length	Muzzle Distance From Specimen
74°F	D	9.0 lbs, 3 oz	8'-0"	17'0"

Impact Location	Results	X - Measurement	Y - Measurement	Speed
1	Pass	111.00"	10.00"	50.0 fps
2	Pass	94.00"	61.00"	49.8 fps
3	Pass	121.00"	60.00"	50.1 fps

Orientation of Missile at Impact was within +/-5° of horizontal.
None of the impacts penetrated the specimens.
"X" measurement is from the left edge of test specimen.
"Y" measurement is from the bottom edge of test specimen.

ASTM E1886-05/1996-06– Fatigue Load Cycling **Design Pressure +50.0 psf / -50.0 psf**

Positive % of Test Load	Positive Pressure Range (psf)	Number Of Cycles	Average Cycle Time (Sec)
20% to 50%	10.0 to 25.0	3500	2.22
0% to 60%	0.0 to 30.0	300	2.15
50% to 80%	25.0 to 40.0	600	2.31
30% to 100%*	15.0 to 50.0	100	2.78

Negative % of Test Load	Negative Pressure Range (psf)	Number Of Cycles	Average Cycle Time (Sec)
30% to 100%*	15.0 to 50.0	50	2.93
50% to 80%	25.0 to 40.0	1050	2.52
0% to 60%	0.0 to 30.0	50	2.79
20% to 50%	10.0 to 25.0	3350	2.28

*Panel deflected 3.00" from original plane at 100% Positive load and 4.25" from original plane at 100% Negative load. At the completion of cycles the door panel was operable. There were no tears in the film. In our opinion, the tape and film used to seal for air leakage did not influence the results of the test.

Jarrett Wright and James Hayhurst, Test Technicians Mfg Observers – Joe Zammitt

IMPACT AND CYCLING TESTS

Specimen 8 – 180.0" x 120.0" Aluminum Sliding Glass Door (OOX)

ASTM E1886-05/1996-06 – Large Missile Impact (2 x 4 Southern Yellow Pine)

Cond. Temp Of Specimen	Missile Level	Missile Weight	Missile Length	Muzzle Distance From Specimen
75°F	D	9.0 lbs, 3 oz	8'-0"	17'0"

Impact Location	Results	X - Measurement	Y - Measurement	Speed
1	Pass	59.00"	60.00"	50.1 fps
2	Pass	168.00"	11.00"	50.1 fps
3	Pass	146.00"	62.00"	49.9 fps

Orientation of Missile at Impact was within +/-5° of horizontal.
None of the impacts penetrated the specimens.
"X" measurement is from the left edge of test specimen.
"Y" measurement is from the bottom edge of test specimen.

ASTM E1886-05/1996-06– Fatigue Load Cycling **Design Pressure +35.0 psf / -35.0 psf**

Positive % of Test Load	Positive Pressure Range (psf)	Number Of Cycles	Average Cycle Time (Sec)
20% to 50%	7.0 to 17.5	3500	1.76
0% to 60%	0.0 to 21.0	300	2.64
50% to 80%	17.5 to 28.0	600	1.28
30% to 100%*	10.5 to 35.0	100	2.51

Negative % of Test Load	Negative Pressure Range (psf)	Number Of Cycles	Average Cycle Time (Sec)
30% to 100%*	10.5 to 35.0	50	2.37
50% to 80%	17.5 to 28.0	1050	1.42
0% to 60%	0.0 to 21.0	50	2.49
20% to 50%	7.0 to 17.5	3350	1.72

*Panel deflected 2.13" from original plane at 100% Positive load and 2.50" from original plane at 100% Negative load. At the completion of cycles the door panel was operable. There were no tears in the film. In our opinion, the tape and film used to seal for air leakage did not influence the results of the test.

Jarrett Wright and James Hayhurst, Test Technicians Mfg Observers – Joe Zammitt

Conditions, Terms, and General Notes Regarding These Tests

The product tested **Has Been** compared to the detailed drawing, bill of materials and fabrication information supplied by the client so named herein. Our analysis, which includes dimensional and component description comparisons, indicate the tested product and engineering information supplied by the client **"Are Equivalent".** The report and representative samples will be retained for four years from the date of initial test.

These test results were obtained by employing all requirements of the designated test methods with no Deviations unless explicitly noted in test report. The test results and specimen supplied for testing are in compliance with the reference.

The test results are specific to the product tested by this laboratory and of the sample supplied by the client named herein, and they relate to no other product either manufactured by the client, a fabricator of the client or of the client or of installed field performance.

This test report does not constitute certification of this product, but only that the above test results were obtained using the designated test methods and they indicate compliance with the performance requirements (paragraphs as listed) of the above referenced specifications.

Testing Evaluation Laboratories, Inc. makes no opinions or endorsements regarding this product and its performance. This report may not be reproduced or quoted in partial form without the expressed written approval of Testing Evaluation Laboratories, Inc.

Testing Evaluation Laboratories, Inc.'s letter, reports, its name or insignia or mark are for the exclusive use of the client so named herein and any other use is strictly prohibited. The report, letters and the name of Testing Evaluation Laboratories, Inc., its seal or mark shall not be used in any circumstance to the general public or in any advertising.

Limitation of liability: Due diligence was used in performing the tests and reporting the results. By acceptance of this report, this client agrees to hold harmless and indemnify Testing Evaluation Laboratories, Inc., its employees, sub-contractors, officers and owners against all claims and demands of any kind whatsoever, which arise out of or in any manner connected with the performance of work referred to herein.

Testing Evaluation Laboratories, Inc.

Vivian K. Wright

Vivian K. Wright,
President

Revision Log

Rev No.	Date	Page(s)	Revision(s)
0	3/21/2014	NA	Original Report Issue

TABLE OF CONTENTS

SHEET #	DESCRIPTION
1	Table of contents
2	Test elevation
3	Horizontal cross sections
4	Vertical cross sections
5	Sill meeting stile block details
6	Frame anchoring
7	Components
8	Components and glazing detail
9	Bill of materials

Testing Evaluation Laboratories Inc
Specimen Complies with Drawing
Deviations Noted - TEL # 019914
Date 3/31/14 Verified by JKW

PRODUCT: FLEETWOOD GLACIER 3300 (OXXO)

PART OR ASSEMBLY: TABLE OF CONTENTS

NO.	DATE	BY

REVISIONS

RW BUILDING CONSULTANTS, INC.
813.659.9197

DATE: 1/21/14
SCALE: N.T.S.
DWG. BY: JK
CHK. BY: LFS
DRAWING NO.: L-7113
SHEET 1 OF 9

© 2014 R.W. BUILDING CONSULTANTS INC.

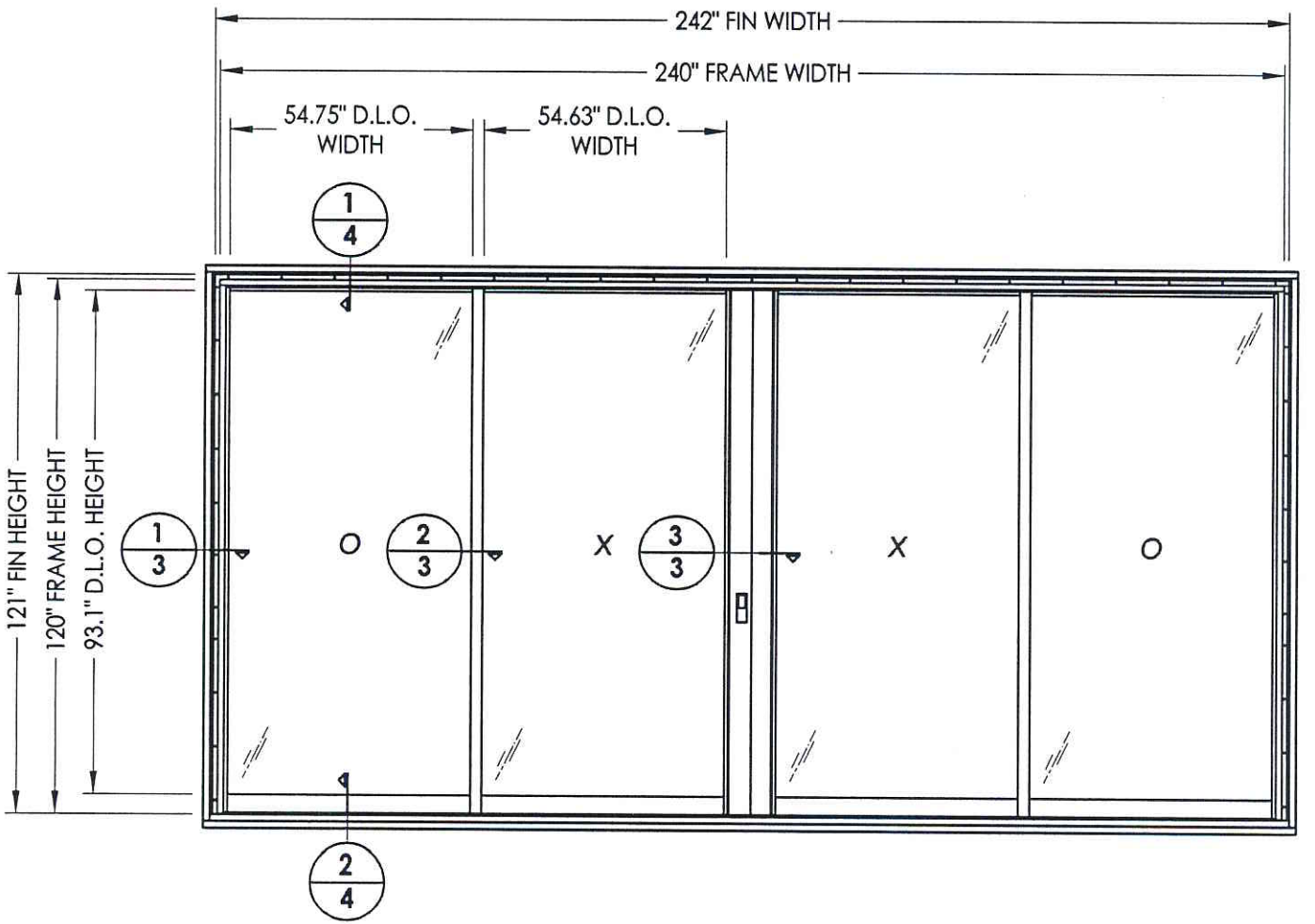

Testing Evaluation Laboratories Inc
Specimen Complies with Drawing
Deviations Noted - TEL # 0199/014
Date 3/31/14 Verified by JKW

PRODUCT: FLEETWOOD GLACIER 3300 (OXXO)

PART OR ASSEMBLY: TEST ELEVATION

NO.	DATE	BY

REVISIONS

RW BUILDING CONSULTANTS, INC.
813.659.9197

DATE: 1/21/14
SCALE: N.T.S.
DWG. BY: JK
CHK. BY: LFS
DRAWING NO.: L-7113
SHEET 2 OF 9

© 2014 R.W. BUILDING CONSULTANTS INC.

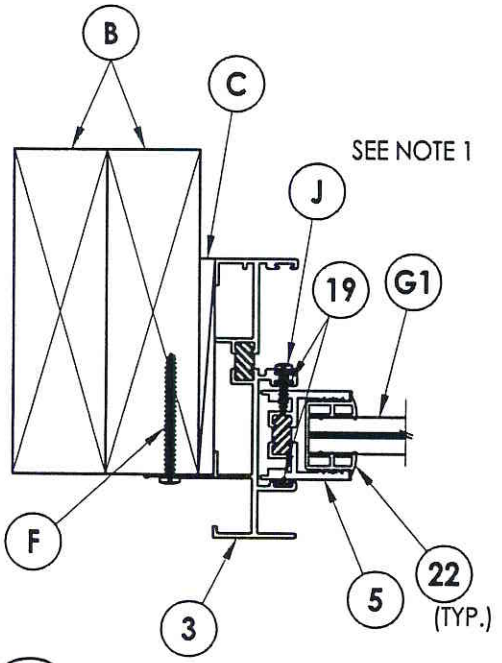

1/3 HORIZONTAL CROSS SECTION

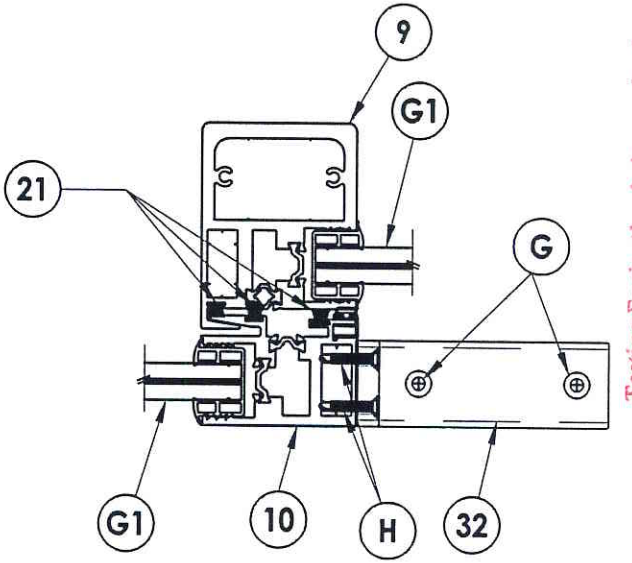

2/3 HORIZONTAL CROSS SECTION

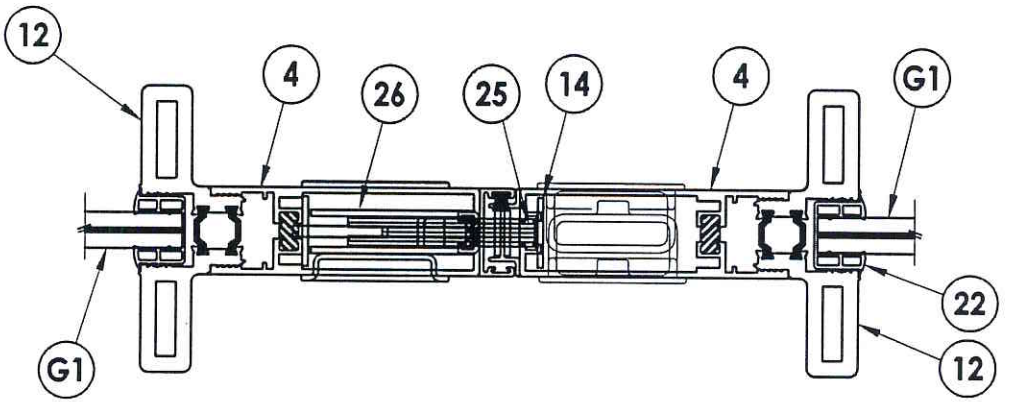

3/3 HORIZONTAL CROSS SECTION

NOTE:
1. Item #J located six inches from each end then 12" o.c.

Testing Evaluation Laboratories Inc
Specimen Complies with Drawing
Deviations Noted TEL # 0199 1014
Date 3/1/14 Verified by JKW

PRODUCT: FLEETWOOD GLACIER 3300 (OXXO)

PART OR ASSEMBLY: HORIZONTAL CROSS SECTIONS

NO.	DATE	BY

REVISIONS

RW BUILDING CONSULTANTS, INC.
813.659.9197

DATE: 1/21/14
SCALE: N.T.S.
DWG. BY: JK
CHK. BY: LFS
DRAWING NO.: L-7113
SHEET 3 OF 9

© 2014 R.W. BUILDING CONSULTANTS INC.

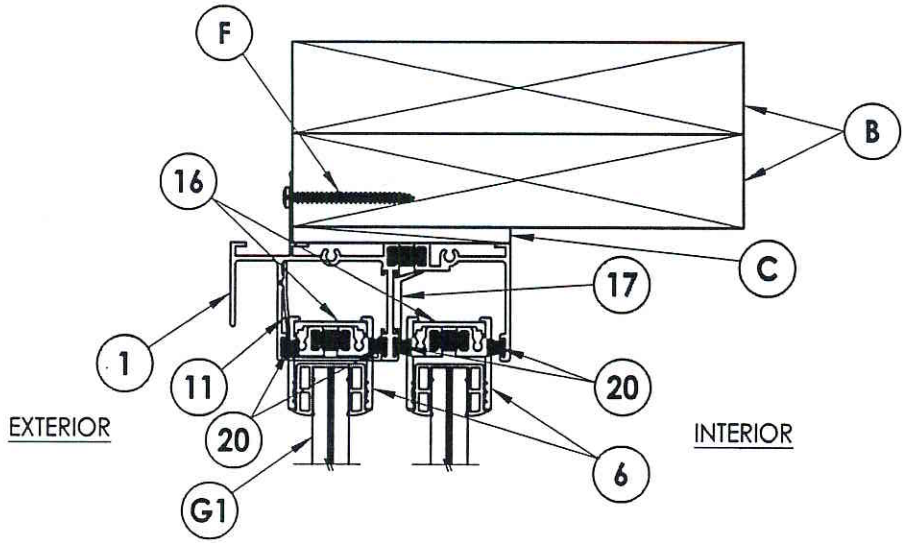

1/4 VERTICAL CROSS SECTION

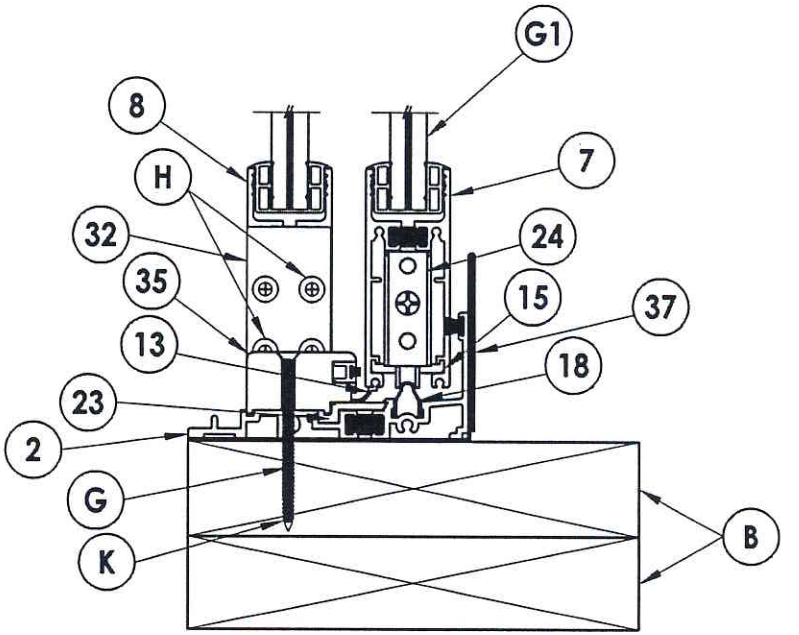

2/4 VERTICAL CROSS SECTION

Testing Evaluation Laboratories Inc
Specimen Complies with Drawing
Deviations Noted - TEL # 01-99-1014
Date 3/31/14 Verified by

PRODUCT: FLEETWOOD GLACIER 3300 (OXXO)

PART OR ASSEMBLY: VERTICAL CROSS SECTIONS

NO.	DATE	REVISIONS	BY

RW BUILDING CONSULTANTS, INC.
813.659.9197

DATE: 1/21/14
SCALE: N.T.S.
DWG. BY: JK
CHK. BY: LFS
DRAWING NO.: L-7113
SHEET 4 OF 9

© 2014 R.W. BUILDING CONSULTANTS INC.

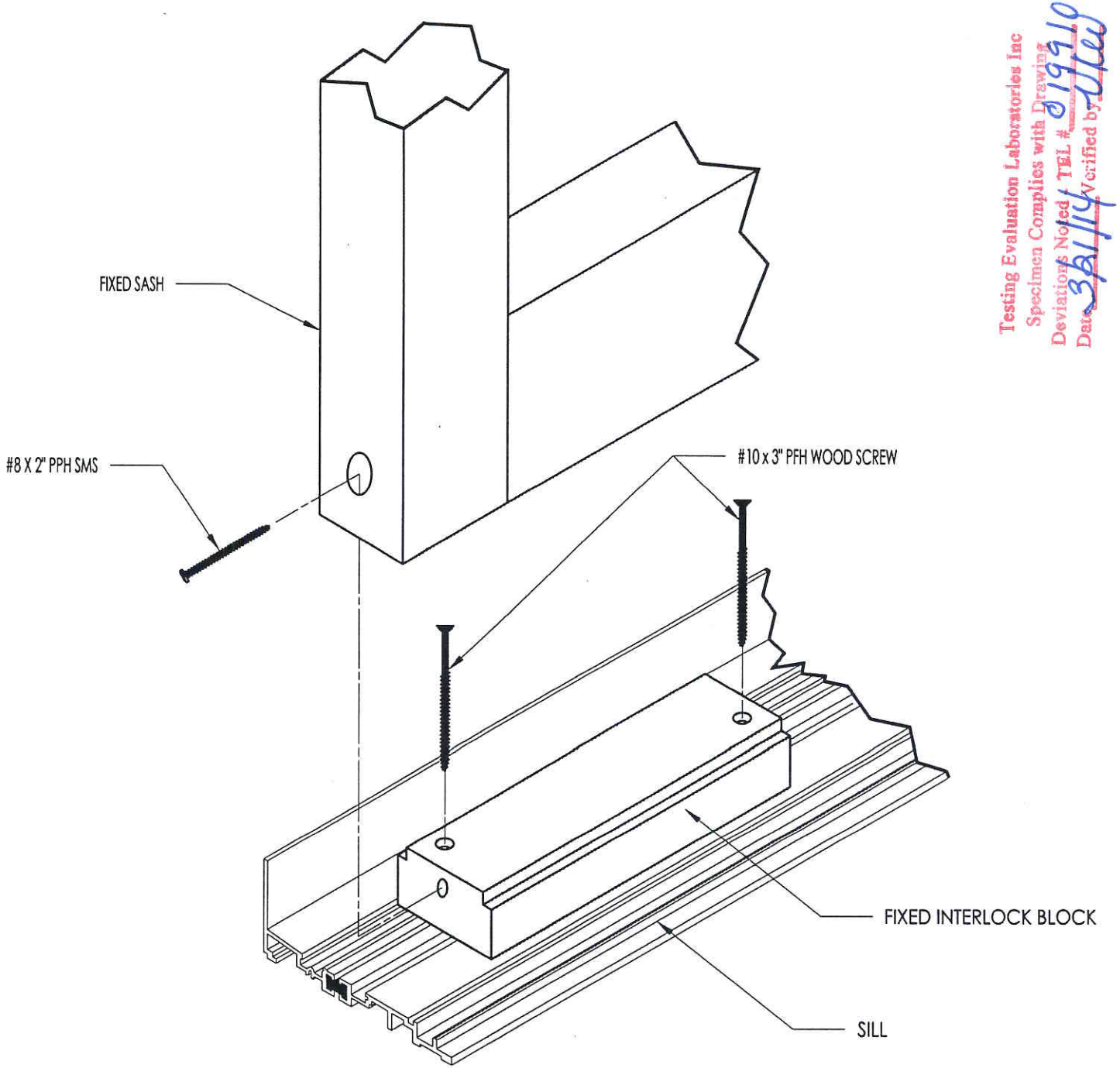

Testing Evaluation Laboratories Inc
Specimen Complies with Drawing
Deviations Noted TEL # 0199-1014
Date 3/31/14 Verified by

PRODUCT: FLEETWOOD GLACIER 3300 (OXXO)

PART OR ASSEMBLY: SILL MEETING STILE BLOCK DETAILS

NO.	DATE	BY

REVISIONS

RW BUILDING CONSULTANTS, INC.
813.659.9197

DATE: 1/21/14
SCALE: N.T.S.
DWG. BY: JK
CHK. BY: LFS
DRAWING NO.: L-7113
SHEET 5 OF 9

© 2014 R.W. BUILDING CONSULTANTS INC.

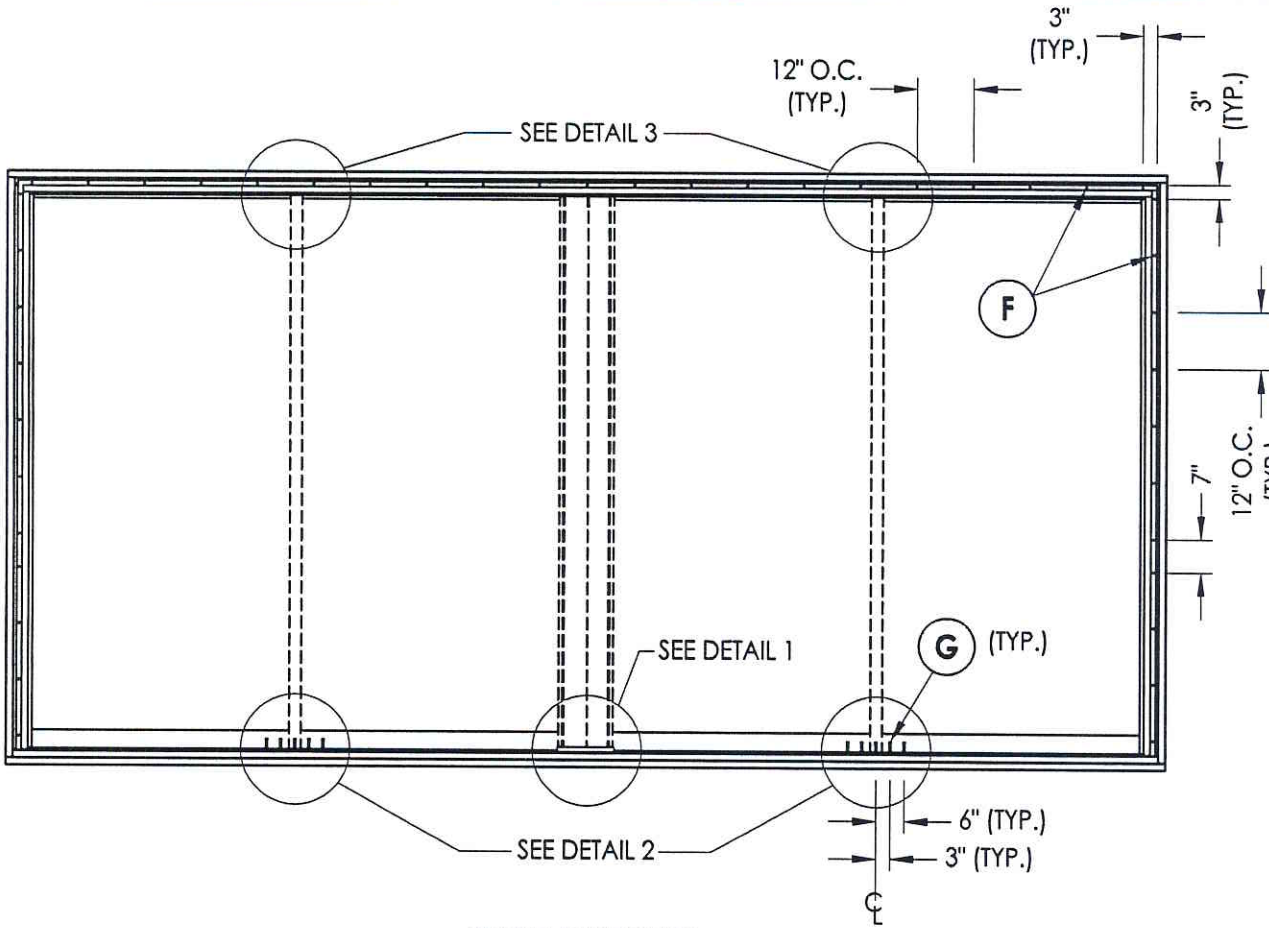

FRAME ANCHORING
2X buck construction

Testing Evaluation Laboratories Inc
Specimen Complies with Drawing
Deviations Noted, TEL # 0199104
Date 3/8/14 Verified by

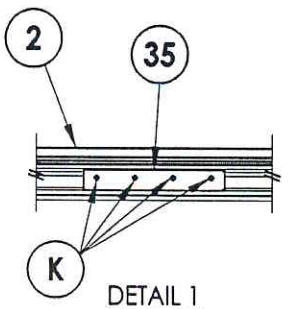

DETAIL 1

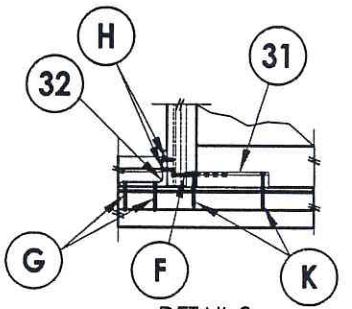

DETAIL 2

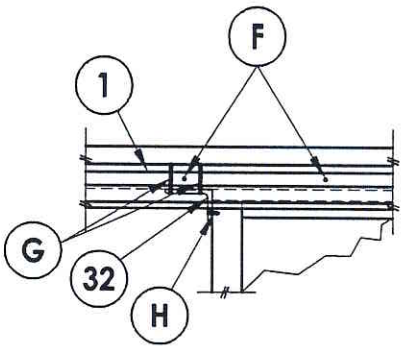

DETAIL 3

PRODUCT: FLEETWOOD GLACIER 3300 (OXXO)

PART OR ASSEMBLY: FRAME ANCHORING

NO.	DATE	REVISIONS	BY

RW BUILDING CONSULTANTS, INC.
813.659.9197

DATE: 1/21/14
SCALE: N.T.S.
DWG. BY: JK
CHK. BY: LFS
DRAWING NO.: L-7113
SHEET 6 OF 9

© 2014 R.W. BUILDING CONSULTANTS INC.

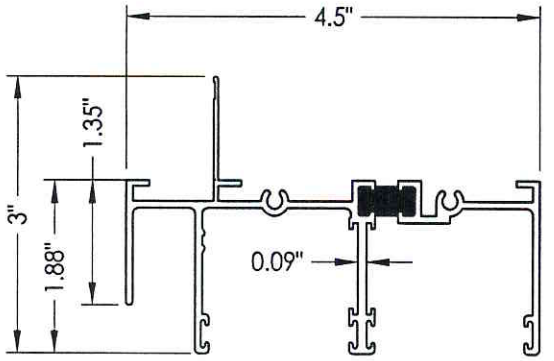

1 HEAD W/ NIAL FIN

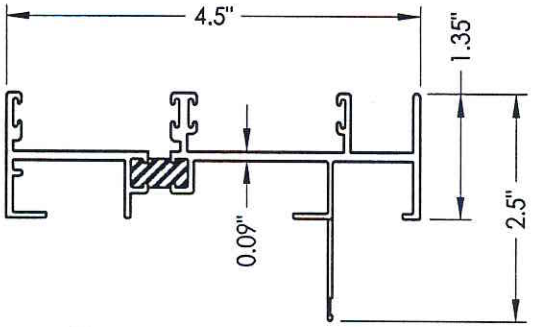

3 JAMB W/ NIAL FIN

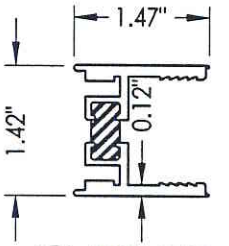

5 FIXED STILE

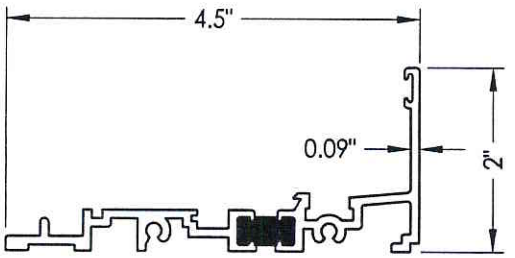

2 SILL

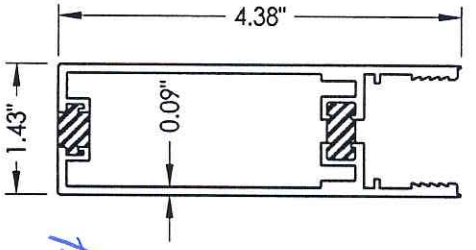

4 LOCK STILE

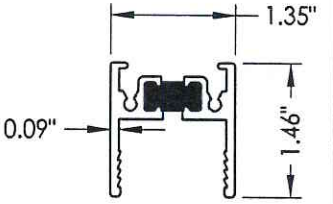

6 TOP RAIL

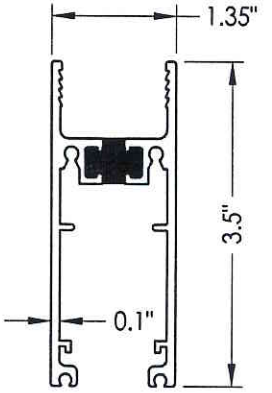

7 SLIDING BOTTOM RAIL

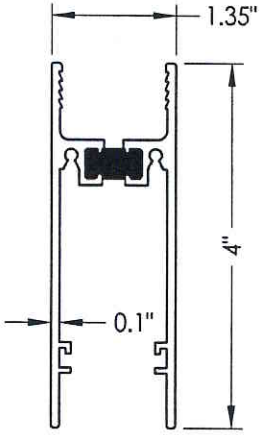

8 FIXED BOTTOM RAIL

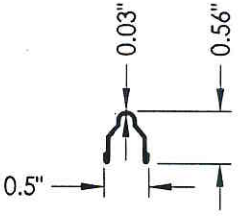

18 TRACK

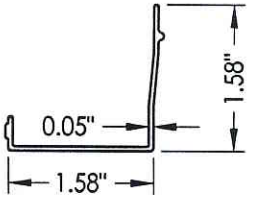

11 HEAD CHANNEL FILLER

Testing Evaluation Laboratories Inc
Specimen Complies with Drawing
Deviations Noted / TEL # 0199-1914
Date 3/31/14 Verified by

PRODUCT: FLEETWOOD GLACIER 3300 (OXXO)

PART OR ASSEMBLY: COMPONENTS

NO.	DATE	BY

REVISIONS

RW BUILDING CONSULTANTS, INC.
813.659.9197

DATE: 2/24/14
SCALE: N.T.S.
DWG. BY: JK
CHK. BY: LFS
DRAWING NO.: L-7113
SHEET 7 OF 9

© 2014 R.W. BUILDING CONSULTANTS INC.

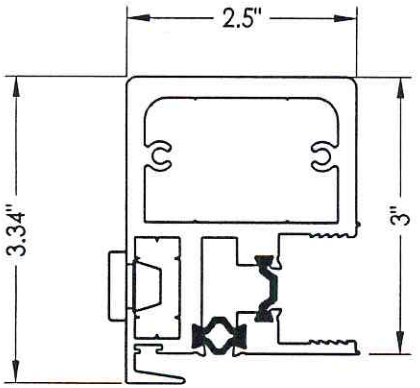

9 HP INTERLOCK

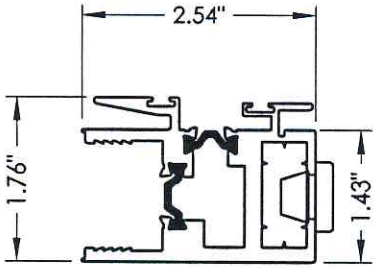

10 FIXED INTERLOCK

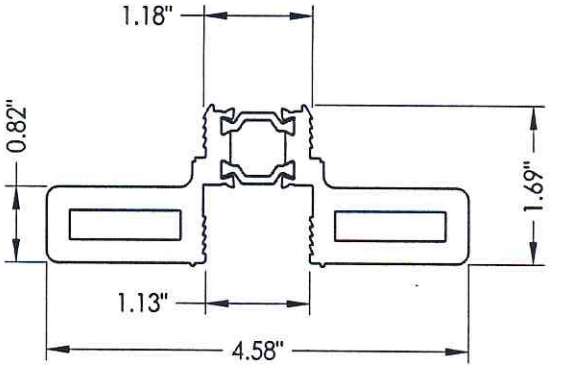

12 HP THERMAL ADAPTOR - DOUBLE WING

Testing Evaluation Laboratories Inc
Specimen Complies with Drawing
Deviations Noted, TEL # 01991014
Date 3/21/14 Verified by [illegible]

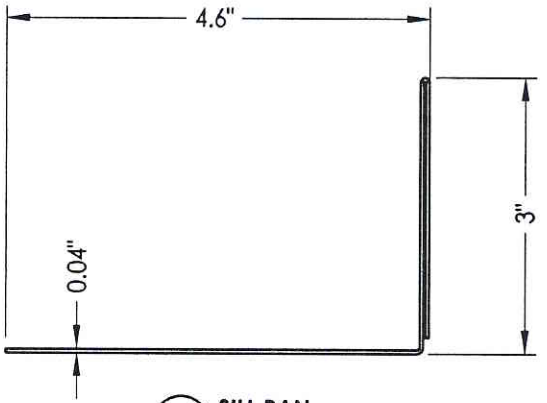

37 SILL PAN

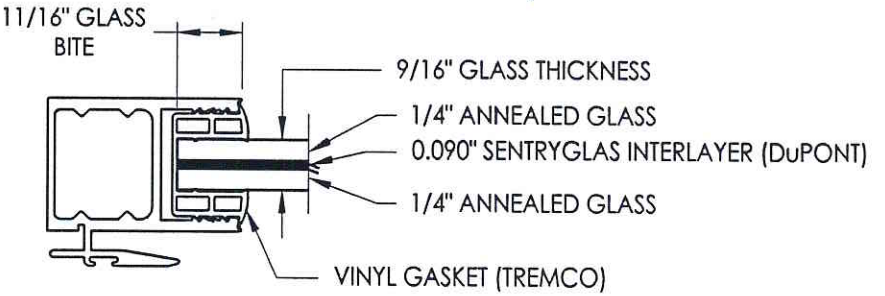

G1 GLAZING DETAIL

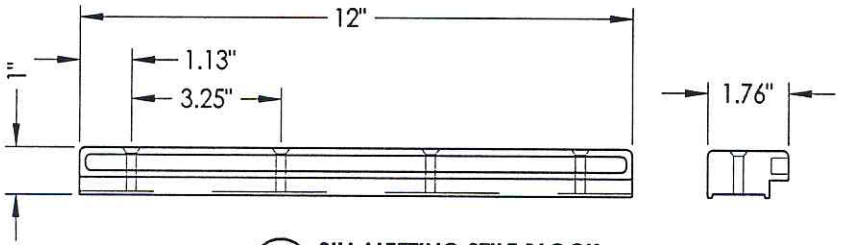

35 SILL MEETING STILE BLOCK

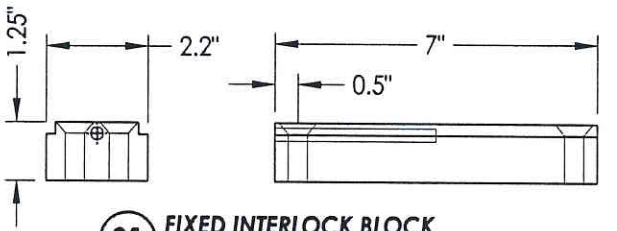

31 FIXED INTERLOCK BLOCK

PRODUCT: FLEETWOOD GLACIER 3300 (OXXO)

PART OR ASSEMBLY: COMPONENTS AND GLAZING DETAIL

NO.	DATE	REVISIONS	BY

RW BUILDING CONSULTANTS, INC.
813.659.9197

DATE: 2/24/14
SCALE: N.T.S.
DWG. BY: JK
CHK. BY: LFS
DRAWING NO.: L-7113
SHEET 8 OF 9

© 2014 R.W. BUILDING CONSULTANTS INC.

BILL OF MATERIALS

ITEM #	DESCRIPTION	MATERIAL
B	2X BUCK SG >= 0.42	WOOD
C	1/4" MAX. SHIM SPACE	-
F	#10 X 2" PPH SMS	STEEL
G	#10 X 2-1/2" PPH SMS	STEEL
H	#10 X 1" PFH SMS	STEEL
J	#8 X 3/4" PPH SELF-DRILLING SMS	STEEL
K	#10 X 3" PFH WS	STEEL
L	1/4-20 X 1/2" MACHINE SCREW	STEEL
1	HEAD W/ NAIL FIN	6063-T6 ALUM
2	SILL	6063-T6 ALUM
3	JAMB W/ NAIL FIN	6063-T6 ALUM
4	LOCK STILE	6063-T6 ALUM
5	FIXED STILE	6063-T6 ALUM
6	TOP RAIL	6063-T6 ALUM
7	SLIDING BOTTOM RAIL	6063-T6 ALUM
8	FIXED BOTTOM RAIL	6063-T6 ALUM
9	HP INTERLOCK	6063-T6 ALUM
10	FIXED INTERLOCK	6063-T6 ALUM
11	HEAD CLOSER	6063-T6 ALUM
12	HP THERMAL ADAPTOR - DOUBLE WING	6063-T6 ALUM
13	SLIDING BOTTOM RAIL WEATHERSTRIP	-
14	LOCK STILE SPREADER	6063-T6 ALUM
15	BOTTOM RAIL SPREADER	6063-T6 ALUM
16	TOP RAIL ISOLATOR	6063-T6 ALUM
17	ISOLATOR	6063-T6 ALUM
18	S.S. TRACK	SS
19	2 FINGER VINYL	-
20	SMALL FINSEAL	-
21	LARGE FINSEAL	-
22	GLAZING VINYL 1" SCR-900, 80 DUROMETER	-
23	SILL ISOLATOR	6063-T6 ALUM
24	ROLLER ASSEMBLY	6063-T6 ALUM
25	STRIKE PLATE ASSY.(JAMB)	6063-T6 ALUM
26	LATCH ASSY.(JAMB)	6063-T6 ALUM
31	FIXED INTERLOCK BLOCK	6063-T6 ALUM
32	3" X 4" L-BRACKET	6063-T6 ALUM
35	SILL MEETING STILE BLOCK	6063-T6 ALUM
37	SILL PAN	-

Testing Evaluation Laboratories Inc
Specimen Complies with Drawing
Deviations Noted - TEL # 0199 1914
Date 3/21/14 Verified by WW

PRODUCT: FLEETWOOD GLACIER 3300 (OXXO)

PART OR ASSEMBLY: BILL OF MATERIALS

NO.	DATE	BY

REVISIONS

RW BUILDING CONSULTANTS, INC.
813.659.9197

DATE: 2/24/14
SCALE: N.T.S.
DWG. BY: JK
CHK. BY: LFS
DRAWING NO.: L-7113
SHEET 9 OF 9

© 2014 R.W. BUILDING CONSULTANTS INC.

TABLE OF CONTENTS

SHEET #	DESCRIPTION
1	Table of contents
2	Test elevation
3	Horizontal cross sections
4	Vertical cross sections
5	Sill meeting stile block details
6	Frame anchoring
7	Components
8	Components and glazing detail
9	Bill of materials

Testing Evaluation Laboratories Inc
Specimen Complies with Drawing
Deviations Noted - TEL # 0199191
Date 3/21/14 Verified by

PRODUCT: FLEETWOOD GLACIER 3300 (OXO)

PART OR ASSEMBLY: TABLE OF CONTENTS

NO.	DATE	BY

REVISIONS

RW BUILDING CONSULTANTS, INC.
813.659.9197

DATE: 2/24/14
SCALE: N.T.S.
DWG. BY: JK
CHK. BY: LFS
DRAWING NO.: L-7114
SHEET 1 OF 9

© 2014 R.W. BUILDING CONSULTANTS INC.

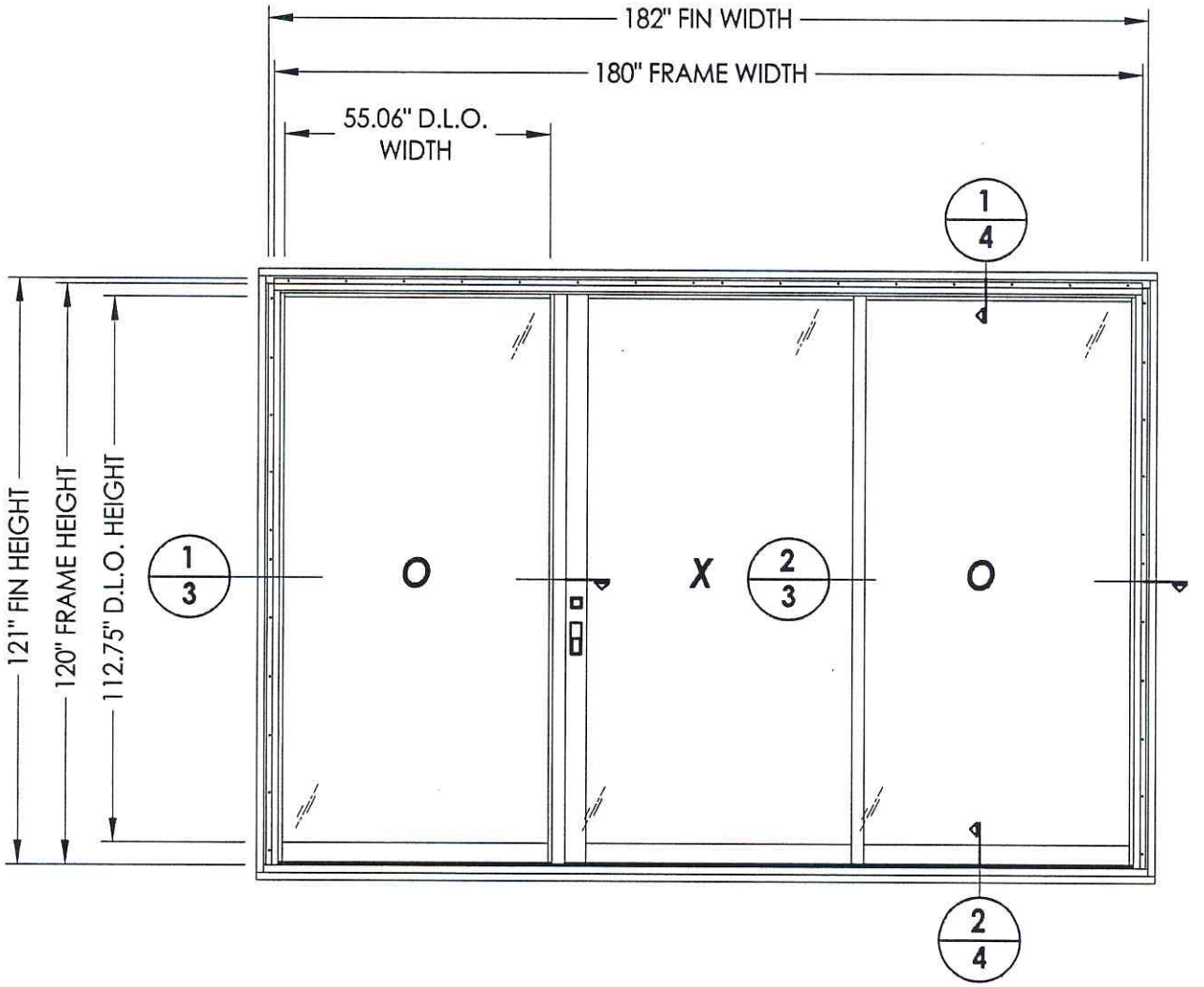

Testing Evaluation Laboratories Inc
Specimen Complies with Drawing
Deviations Noted / TEL # 0199 1014
Date 3/8/14 Verified by

PRODUCT: FLEETWOOD GLACIER 3300 (OXO)

PART OR ASSEMBLY: TEST ELEVATION

NO.	DATE	BY

REVISIONS

RW BUILDING CONSULTANTS, INC.
813.659.9197

DATE: 2/24/14
SCALE: N.T.S.
DWG. BY: JK
CHK. BY: LFS
DRAWING NO.: L-7114
SHEET 2 OF 9

© 2014 R.W. BUILDING CONSULTANTS INC.

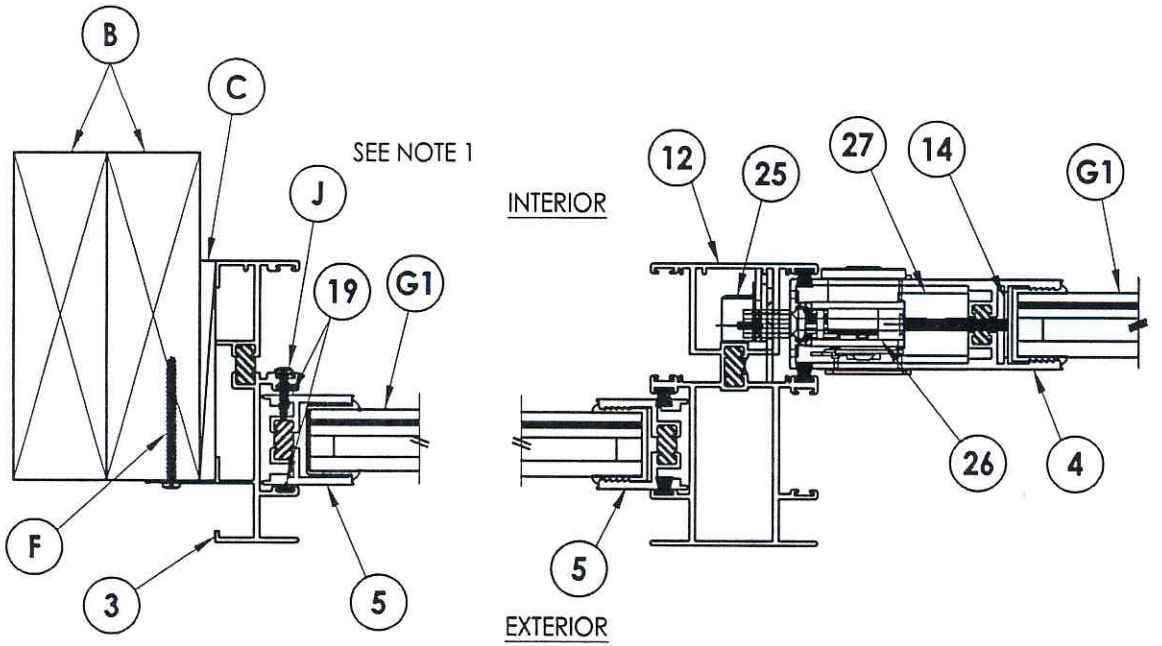

1/3 HORIZONTAL CROSS SECTION

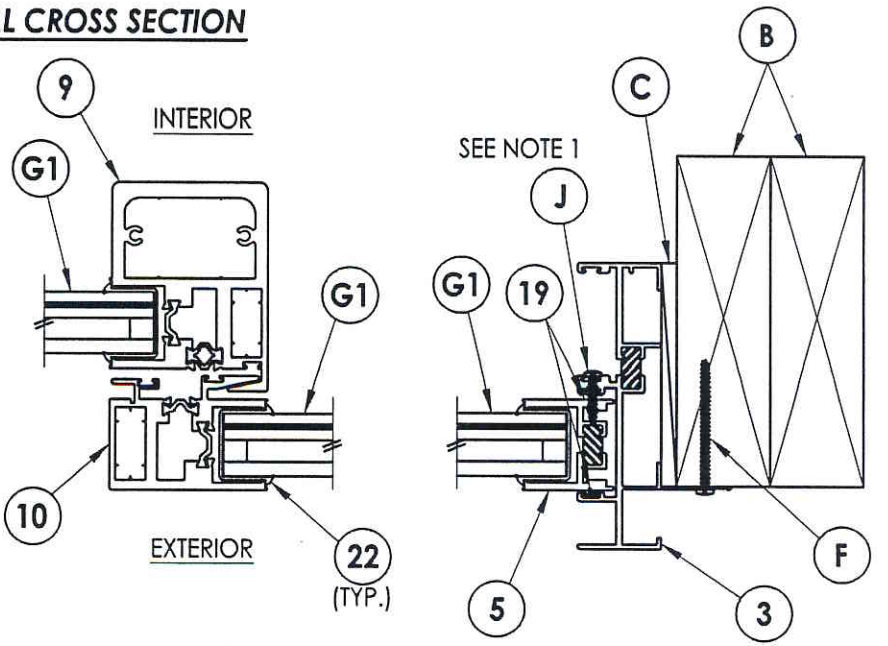

2/3 HORIZONTAL CROSS SECTION

NOTE:
1. Item #J located six inches from each end then 12" o.c.

Testing Evaluation Laboratories Inc
Specimen Complies with Drawing
Deviations Noted - TEL # 0199 1014
Date 3/31/14 Certified by

PRODUCT: FLEETWOOD GLACIER 3300 (OXO)

PART OR ASSEMBLY: HORIZONTAL CROSS SECTIONS

NO.	DATE	REVISIONS	BY

RW BUILDING CONSULTANTS, INC.
813.659.9197

DATE: 2/24/14
SCALE: N.T.S.
DWG. BY: JK
CHK. BY: LFS
DRAWING NO.: L-7114
SHEET 3 OF 9

© 2014 R.W. BUILDING CONSULTANTS INC.

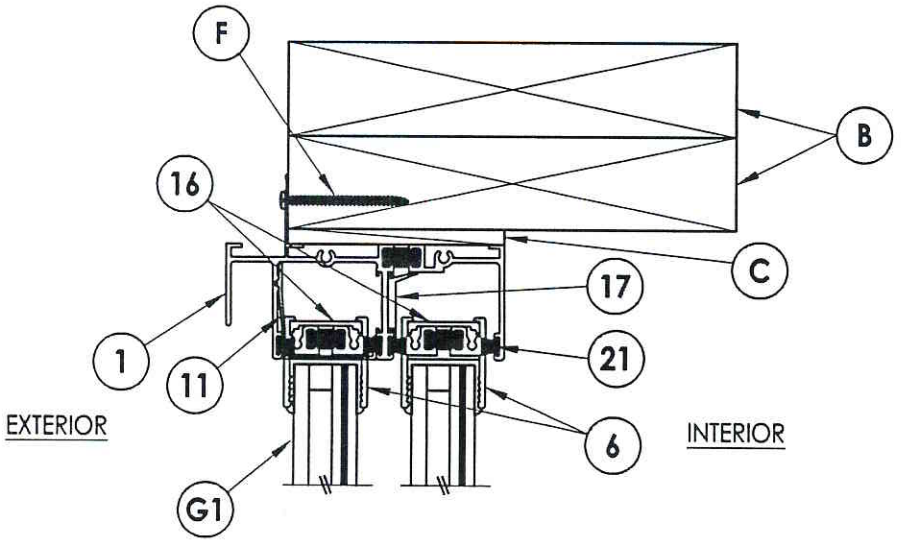

1/4 VERTICAL CROSS SECTION

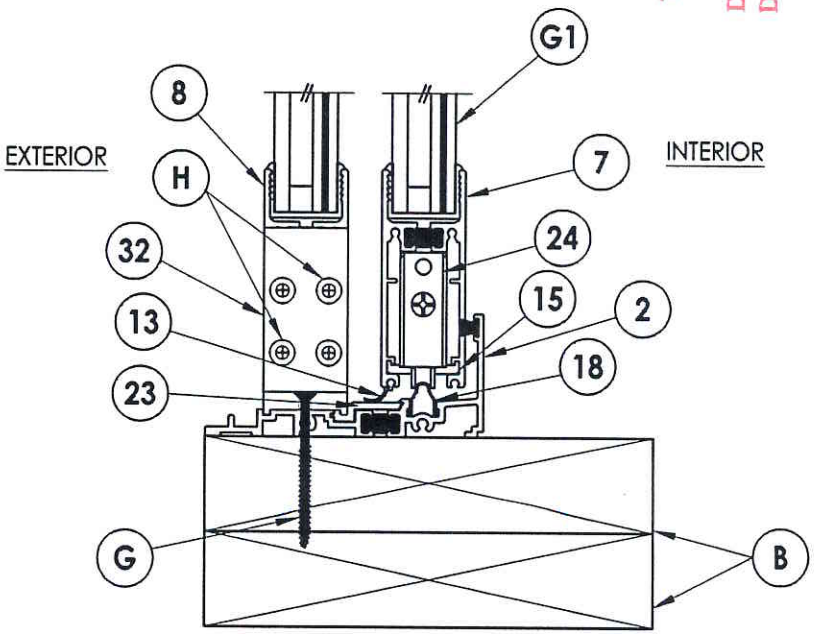

2/4 VERTICAL CROSS SECTION

Testing Evaluation Laboratories Inc
Specimen Complies with Drawing
Deviations Noted - TEL # 0199-1014
Date 3/21/14 Verified by [illegible]

PRODUCT: FLEETWOOD GLACIER 3300 (OXO)

PART OR ASSEMBLY: VERTICAL CROSS SECTIONS

NO.	DATE	REVISIONS	BY

RW BUILDING CONSULTANTS, INC.
813.659.9197

DATE: 2/24/14
SCALE: N.T.S.
DWG. BY: JK
CHK. BY: LFS
DRAWING NO.: L-7114
SHEET 4 OF 9

© 2014 R.W. BUILDING CONSULTANTS INC.

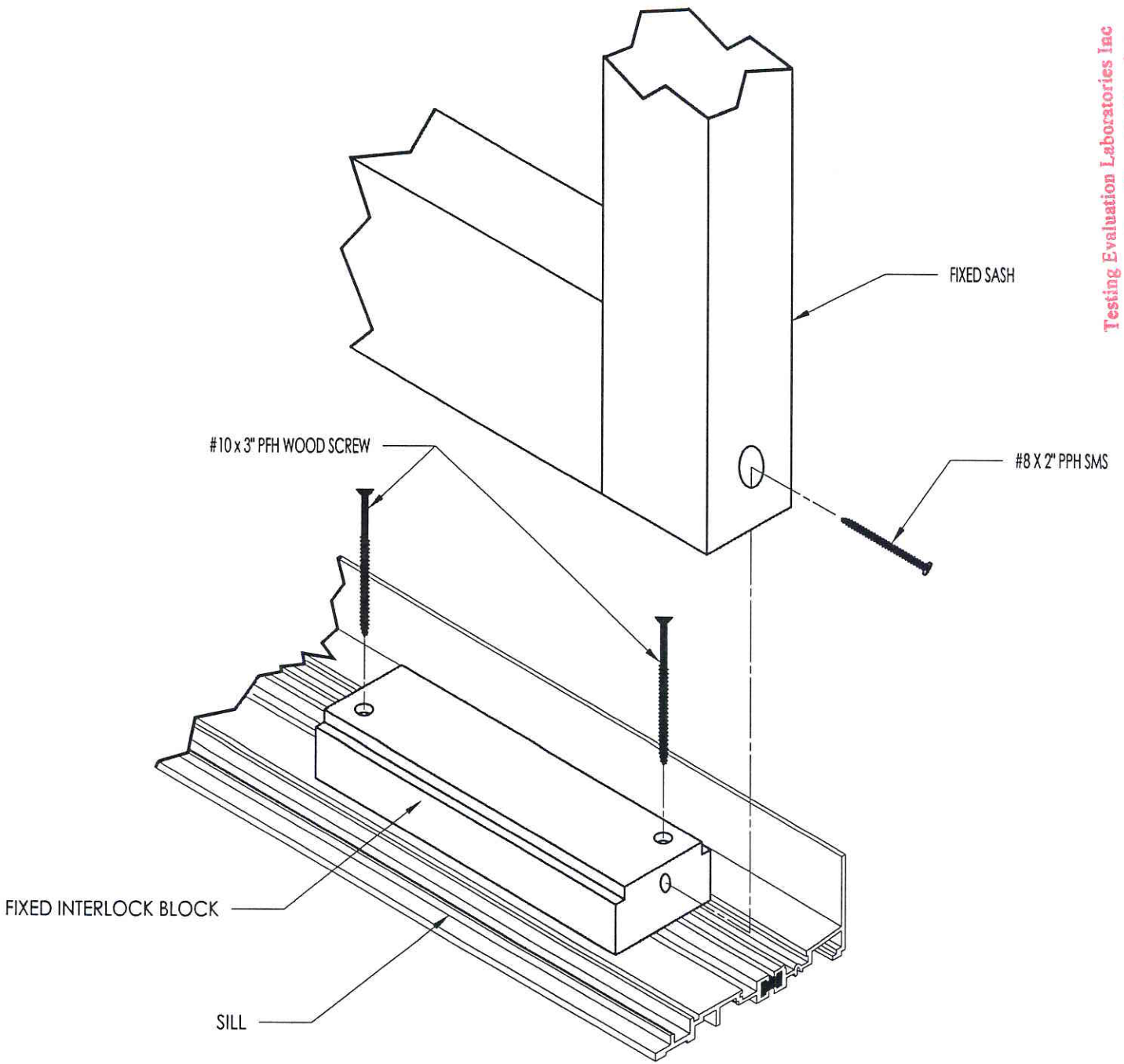

Testing Evaluation Laboratories Inc
Specimen Complies with Drawing
Deviations Noted - TEL # 0199 1014
Date 3/31/14 Verified by

PRODUCT: FLEETWOOD GLACIER 3300 (OXO)

PART OR ASSEMBLY: SILL MEETING STILE BLOCK DETAILS

NO.	DATE	BY

REVISIONS

RW BUILDING CONSULTANTS, INC.
813.659.9197

DATE: 2/24/14
SCALE: N.T.S.
DWG. BY: JK
CHK. BY: LFS
DRAWING NO.: L-7114
SHEET 5 OF 9

© 2014 R.W. BUILDING CONSULTANTS INC.

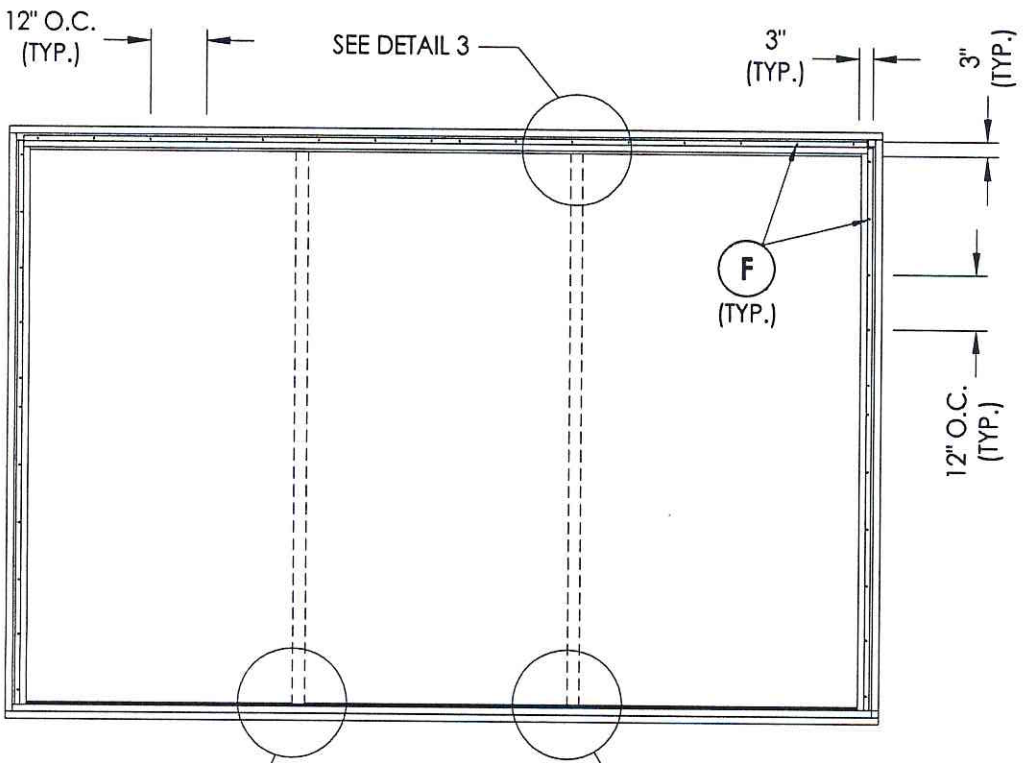

FRAME ANCHORING
2X buck construction

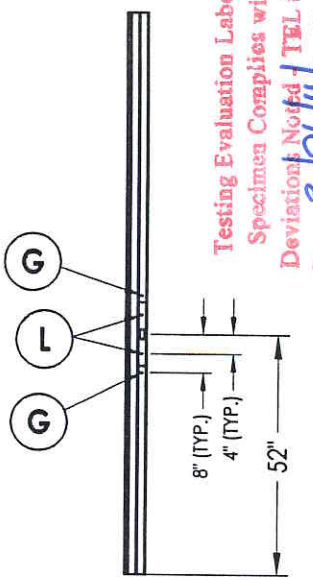

LOCK JAMB

Testing Evaluation Laboratories Inc
Specimen Complies with Drawing
Deviations Noted - TEL # 01991 014
Date 3/31/14 Verified by

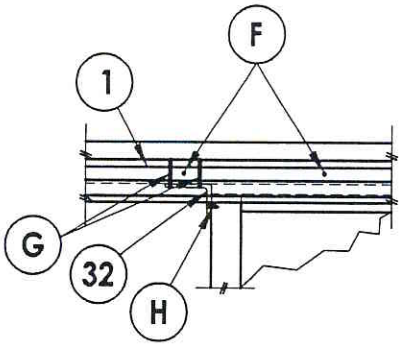

DETAIL 3

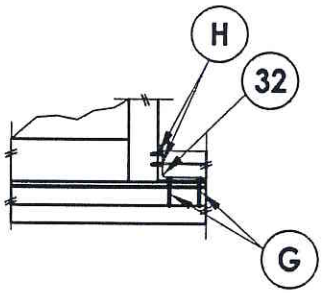

DETAIL 2

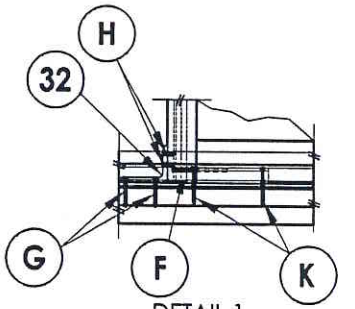

DETAIL 1

PRODUCT: FLEETWOOD GLACIER 3300 (OXO)

PART OR ASSEMBLY: FRAME ANCHORING

NO.	DATE	BY

REVISIONS

RW BUILDING CONSULTANTS, INC.
813.659.9197

DATE: 2/24/14
SCALE: N.T.S.
DWG. BY: JK
CHK. BY: LFS
DRAWING NO.: L-7114
SHEET 6 OF 9

© 2014 R.W. BUILDING CONSULTANTS INC.

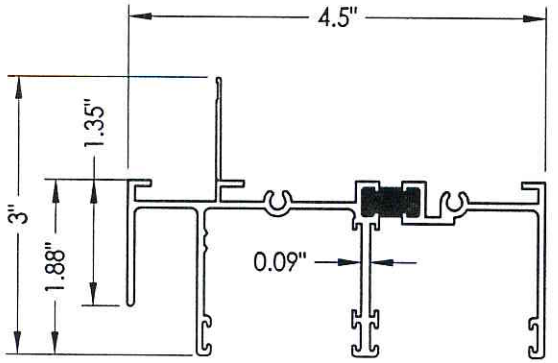

1 HEAD W/ NAIL FIN

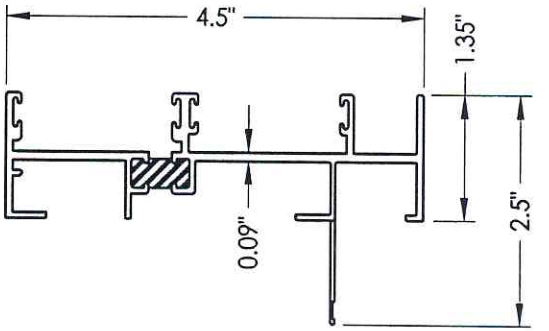

3 JAMB W/ NAIL FIN

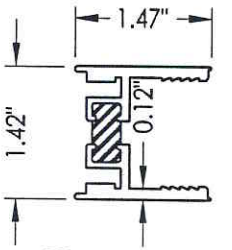

5 FIXED STILE

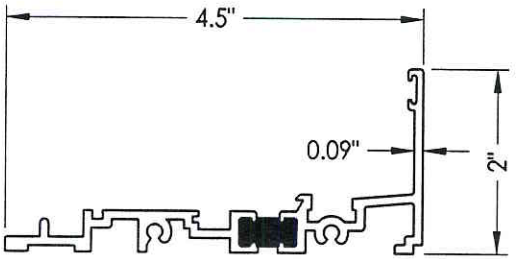

2 SILL

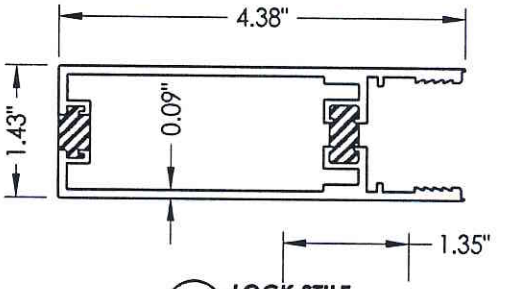

4 LOCK STILE

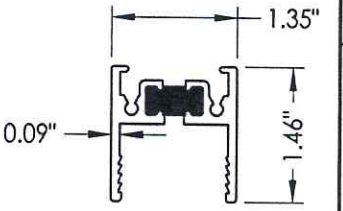

6 TOP RAIL

Testing Evaluation Laboratories Inc
Specimen Complies with Drawing
Deviations Noted - TEL # 01991014
Date 3/21/14 Verified by JMW

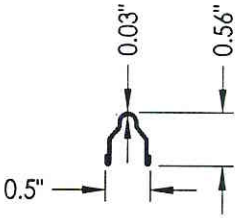

18 TRACK

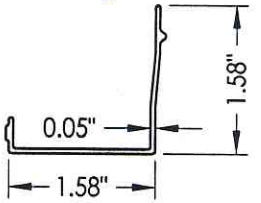

11 HEAD CHANNEL FILLER

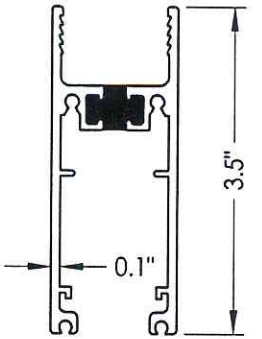

7 SLIDING BOTTOM RAIL

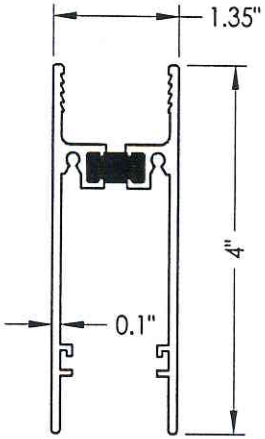

8 FIXED BOTTOM RAIL

PRODUCT: FLEETWOOD GLACIER 3300 (OXO)

PART OR ASSEMBLY: COMPONENTS

NO.	DATE	BY

REVISIONS

RW BUILDING CONSULTANTS, INC.
813.659.9197

DATE: 2/24/14
SCALE: N.T.S.
DWG. BY: JK
CHK. BY: LFS
DRAWING NO.: L-7114
SHEET 7 OF 9

© 2014 R.W. BUILDING CONSULTANTS INC.

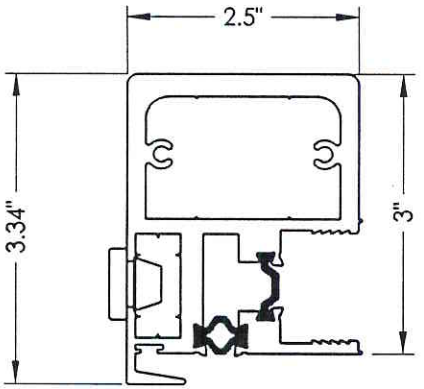

9 HP INTERLOCK

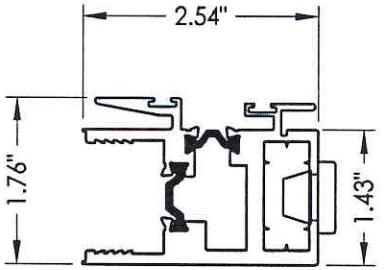

10 FIXED INTERLOCK

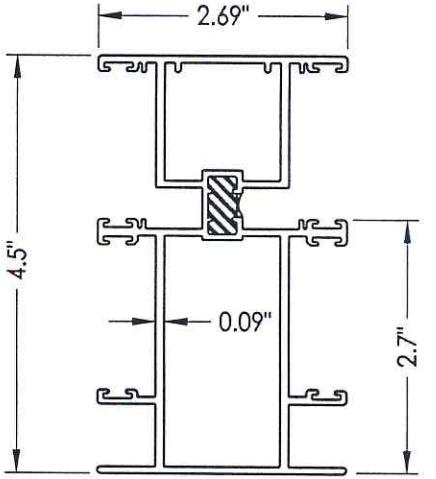

12 FALL JAMB

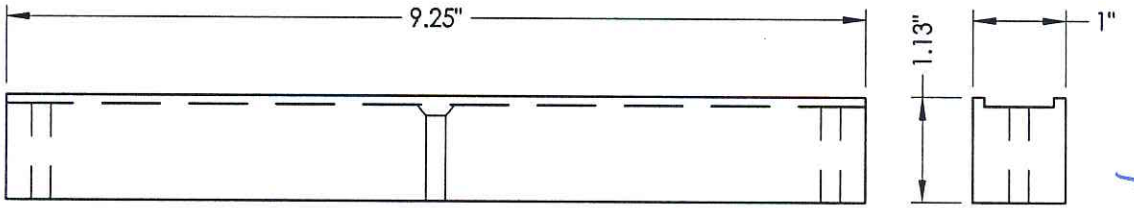

27 SPACER
Archetype Narrow Latch

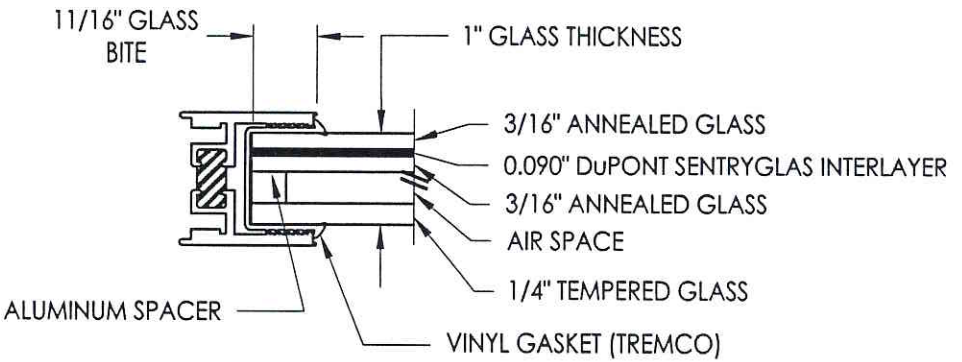

G1 GLAZING DETAIL

Testing Evaluation Laboratories Inc
Specimen Complies with Drawing
Deviations Noted / TEL # 0199-1014
Date 3/21/14 Verified by JJW

PRODUCT: FLEETWOOD GLACIER 3300 (OXO)

PART OR ASSEMBLY: COMPONENTS AND GLAZING DETAIL

NO.	DATE	REVISIONS	BY

RW BUILDING CONSULTANTS, INC.
813.659.9197

DATE: 2/24/14
SCALE: N.T.S.
DWG. BY: JK
CHK. BY: LFS
DRAWING NO.: L-7114
SHEET 8 OF 9

© 2014 R.W. BUILDING CONSULTANTS INC.

BILL OF MATERIALS

ITEM #	DESCRIPTION	MATERIAL
B	2X BUCK SG >= 0.42	WOOD
C	1/4" MAX. SHIM SPACE	-
F	#10 X 2" PPH SMS	STEEL
G	#10 X 2-1/2" PPH SMS	STEEL
H	#10 X 1" PFH SMS	STEEL
J	#8 X 3/4" PPH SELF-DRILLING SMS	STEEL
K	#10 X 3" PFH WS	STEEL
L	1/4-20 - 1/2" MACHINE SCREW	STEEL
1	HEAD W/ NAIL FIN	6063-T6 ALUM
2	SILL	6063-T6 ALUM
3	JAMB W/ NAIL FIN	6063-T6 ALUM
4	LOCK STILE	6063-T6 ALUM
5	FIXED STILE	6063-T6 ALUM
6	TOP RAIL	6063-T6 ALUM
7	SLIDING BOTTOM RAIL	6063-T6 ALUM
8	FIXED BOTTOM RAIL	6063-T6 ALUM
9	HP INTERLOCK	6063-T6 ALUM
10	FIXED INTERLOCK	6063-T6 ALUM
11	HEAD CLOSER	6063-T6 ALUM
12	FALL JAMB	6063-T6 ALUM
13	SLIDING BOTTOM RAIL WEATHER STRIP	-
14	LOCK STILE SPREADER	6063-T6 ALUM
15	BOTTOM RAIL SPREADER	6063-T6 ALUM
16	TOP RAIL ISOLATOR	6063-T6 ALUM
17	ISOLATOR	6063-T6 ALUM
18	S.S. TRACK	SS
19	2 FINGER VINYL	-
20	SMALL FINSEAL	-
21	LARGE FINSEAL	-
22	GLAZING VINYL 1" SCR-900, 80 DUROMETER	-
23	SILL ISOLATOR	6063-T6 ALUM
24	ROLLER ASSEMBLY	-
25	STRIKE PLATE ASSY.(JAMB)	-
26	LATCH ASSY.(JAMB)(Archetype Narrow Latch)	-
27	SPACER (ARCHETYPE NARROW LATCH)	-
32	3" X 4" L-BRACKETT	6063-T6 ALUM

Testing Evaluation Laboratories Inc
Specimen Complies with Drawing
Deviations Noted TEL # 0199/014
Date 3/31/14 Verified by JWW

PRODUCT: FLEETWOOD GLACIER 3300 (OXO)

PART OR ASSEMBLY: BILL OF MATERIALS

NO.	DATE	BY

REVISIONS

RW BUILDING CONSULTANTS, INC.
813.659.9197

DATE: 2/24/14
SCALE: N.T.S.
DWG. BY: JK
CHK. BY: LFS
DRAWING NO.: L-7114
SHEET 9 OF 9

© 2014 R.W. BUILDING CONSULTANTS INC.

TABLE OF CONTENTS

SHEET #	DESCRIPTION
1	Table of contents
2	Test elevation
3	Horizontal cross sections
4	Vertical cross sections
5	Sill meeting stile block details
6	Frame anchoring
7	Components
8	Components and glazing detail
9	Bill of materials

Testing Evaluation Laboratories Inc
Specimen Complies with Drawing
Deviations Noted - TEL # 0199-1014
Date 3/21/14 Verified by JJW

PRODUCT: FLEETWOOD GLACIER 3300 (OOX)

PART OR ASSEMBLY: TABLE OF CONTENTS

NO.	DATE	BY

REVISIONS

RW BUILDING CONSULTANTS, INC.
813.659.9197

DATE: 2/24/14
SCALE: N.T.S.
DWG. BY: JK
CHK. BY: LFS
DRAWING NO.: L-7112
SHEET 1 OF 9

© 2014 R.W. BUILDING CONSULTANTS INC.

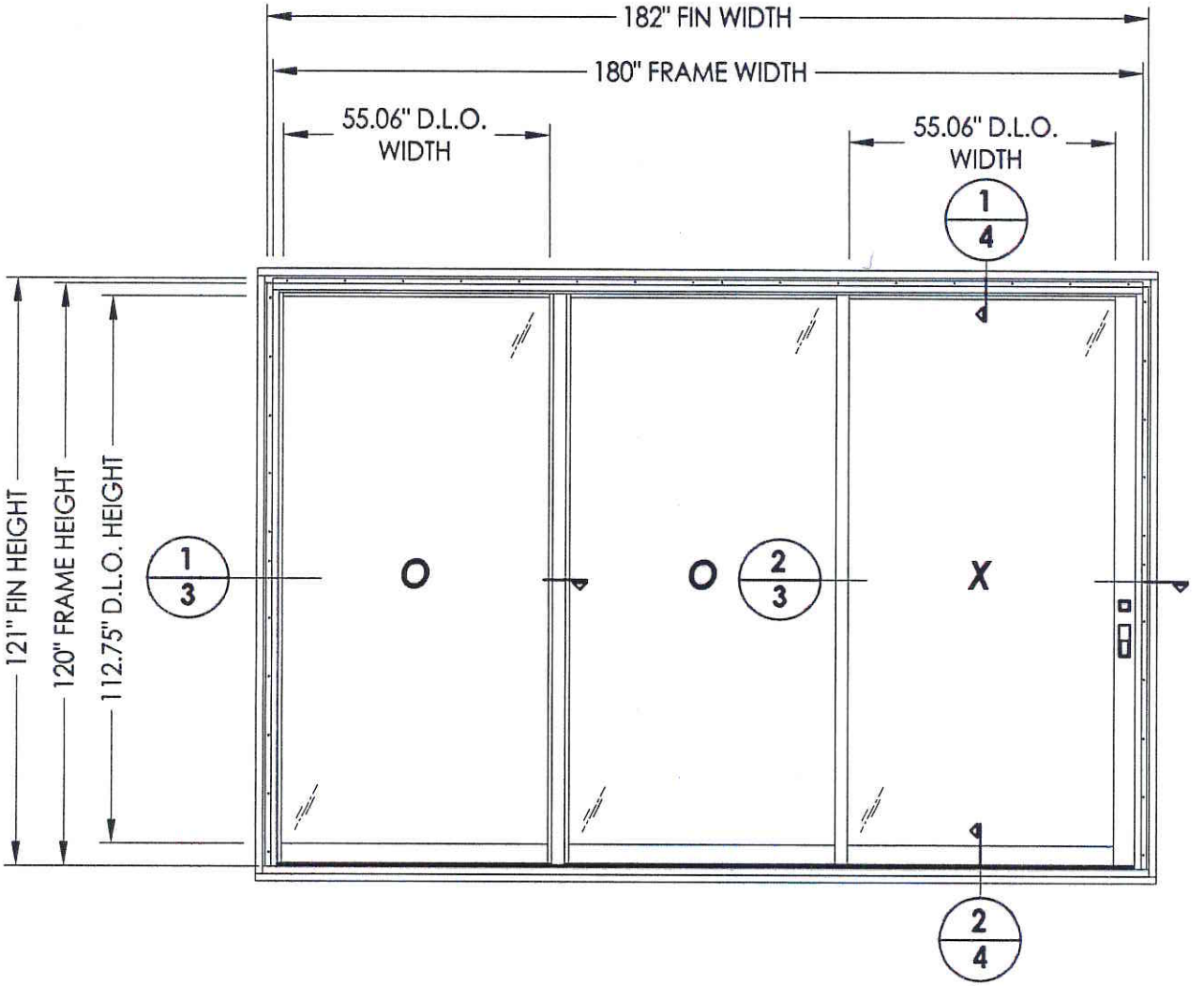

Testing Evaluation Laboratories Inc
Specimen Complies with Drawing
Deviations Noted - TEL # 019914
Date 3/21/14 Verified by [illegible]

PRODUCT: FLEETWOOD GLACIER 3300 (OOX)

PART OR ASSEMBLY: TEST ELEVATION

NO.	DATE	BY

REVISIONS

RW BUILDING CONSULTANTS, INC.
813.659.9197

DATE: 2/24/14
SCALE: N.T.S.
DWG. BY: JK
CHK. BY: LFS
DRAWING NO.: L-7112
SHEET 2 OF 9

© 2014 R.W. BUILDING CONSULTANTS INC.

NOTE:
1. Item #J located six inches from each end then 12" o.c.

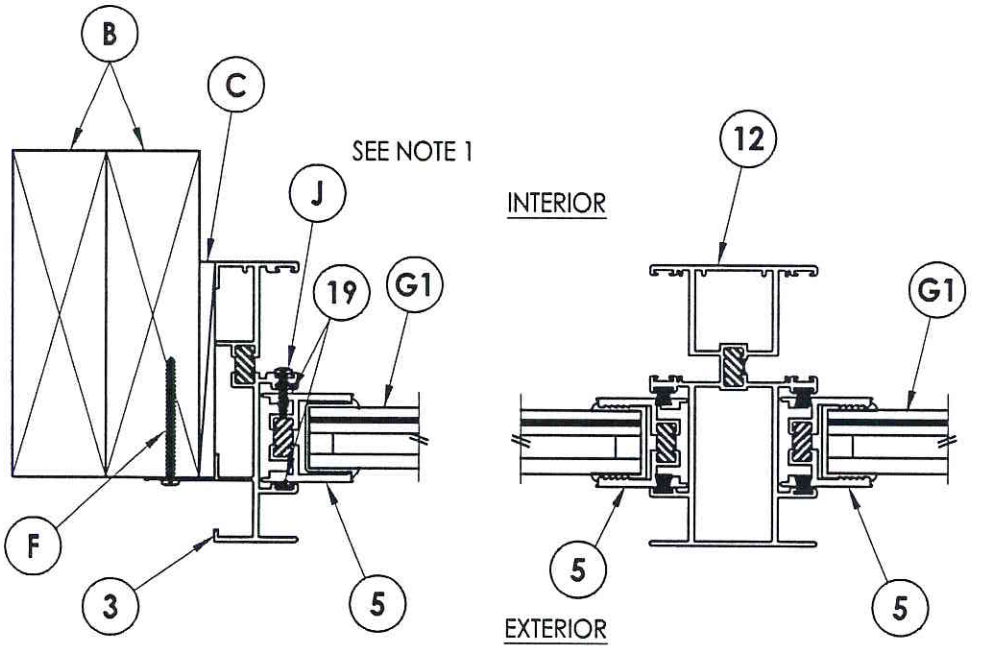

1/3 HORIZONTAL CROSS SECTION

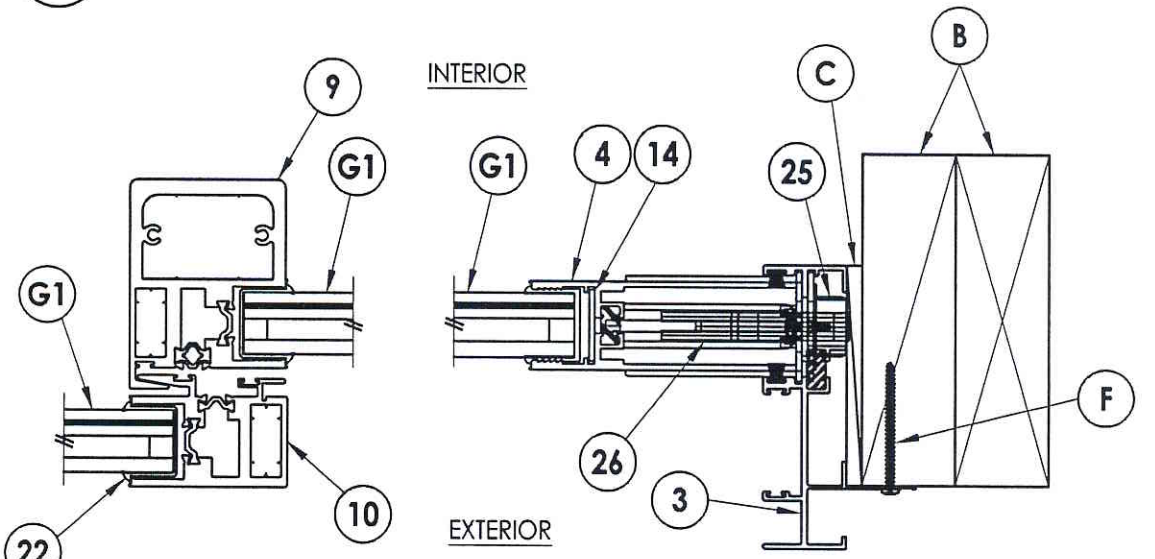

2/3 HORIZONTAL CROSS SECTION

Testing Evaluation Laboratories Inc
Specimen Complies with Drawing
Deviations Noted, TEL # 0199 1014
Date 3/31/14 Verified by

PRODUCT: FLEETWOOD GLACIER 3300 (OOX)

PART OR ASSEMBLY: HORIZONTAL CROSS SECTIONS

NO.	DATE	REVISIONS	BY

RW BUILDING CONSULTANTS, INC.
813.659.9197

DATE: 2/24/14
SCALE: N.T.S.
DWG. BY: JK
CHK. BY: LFS
DRAWING NO.: L-7112
SHEET 3 OF 9

© 2014 R.W. BUILDING CONSULTANTS INC.

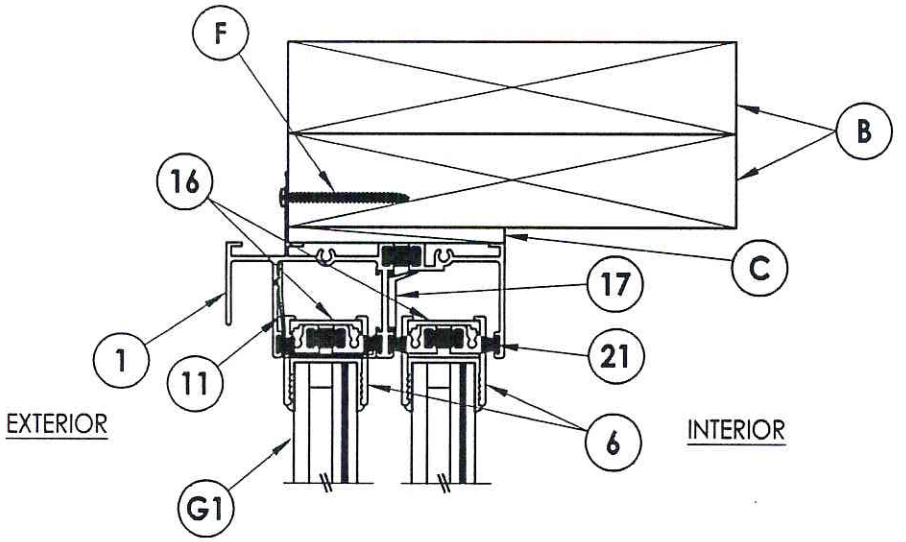

1/4 VERTICAL CROSS SECTION

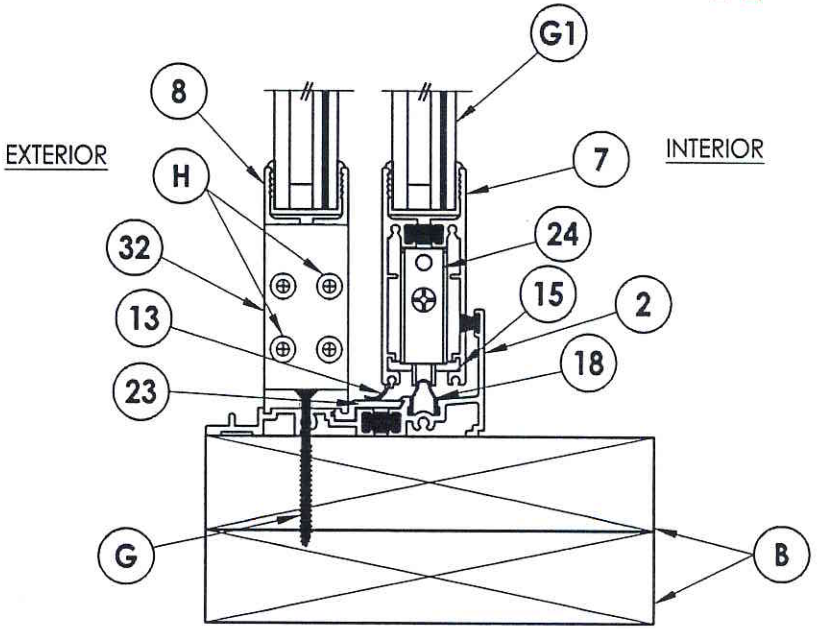

2/4 VERTICAL CROSS SECTION

Testing Evaluation Laboratories Inc
Specimen Complies with Drawing
Deviations Noted TEL #0199-1014
Date 3/11/14 Verified by

PRODUCT: FLEETWOOD GLACIER 3300 (OOX)

PART OR ASSEMBLY: VERTICAL CROSS SECTIONS

NO.	DATE	REVISIONS	BY

RW BUILDING CONSULTANTS, INC.
813.659.9197

DATE: 2/24/14
SCALE: N.T.S.
DWG. BY: JK
CHK. BY: LFS
DRAWING NO.: L-7112
SHEET 4 OF 9

© 2014 R.W. BUILDING CONSULTANTS INC.

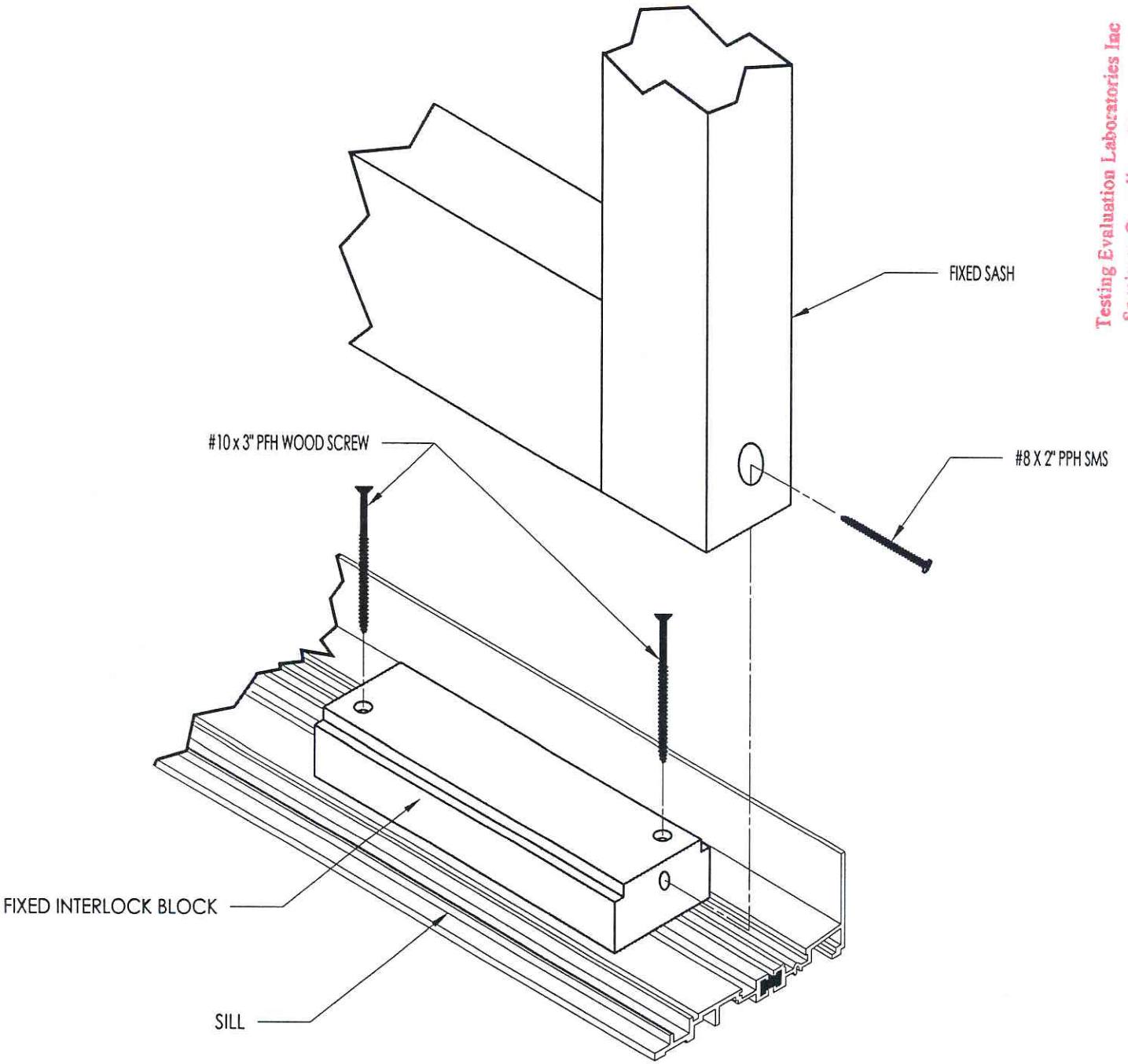

Testing Evaluation Laboratories Inc
Specimen Complies with Drawing
Deviations Noted - TEL # 0199191
Date 3/21/14 Verified by [illegible]

PRODUCT: FLEETWOOD GLACIER 3300 (OOX)

PART OR ASSEMBLY: SILL MEETING STILE BLOCK DETAILS

NO.	DATE	BY

REVISIONS

RW BUILDING CONSULTANTS, INC.
813.659.9197

DATE: 2/24/14
SCALE: N.T.S.
DWG. BY: JK
CHK. BY: LFS
DRAWING NO.: L-7112
SHEET 5 OF 9

© 2014 R.W. BUILDING CONSULTANTS INC.

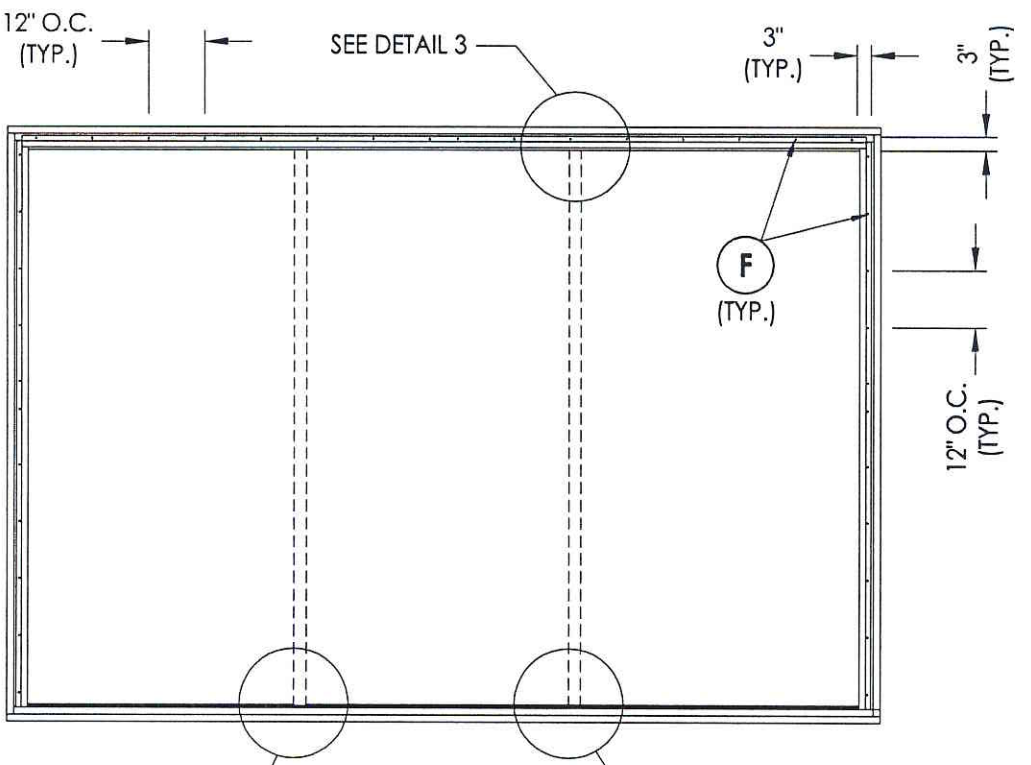

FRAME ANCHORING
2X buck construction

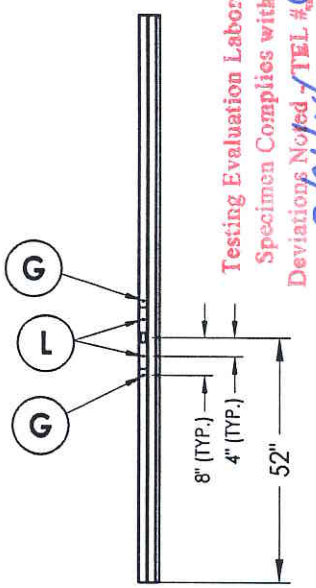

LOCK JAMB

Testing Evaluation Laboratories Inc
Specimen Complies with Drawing
Deviations Noted / TEL # 0199101
Date 3/31/14 Verified by

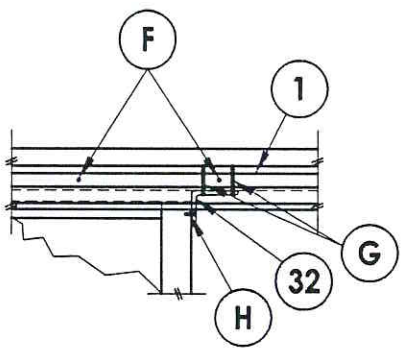

DETAIL 3

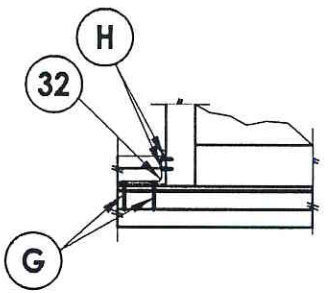

DETAIL 2

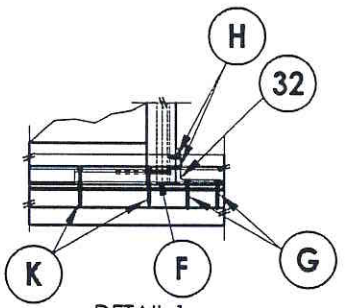

DETAIL 1

PRODUCT: FLEETWOOD GLACIER 3300 (OOX)

PART OR ASSEMBLY: FRAME ANCHORING

NO.	DATE	BY

REVISIONS

RW BUILDING CONSULTANTS, INC.
813.659.9197

DATE: 2/24/14
SCALE: N.T.S.
DWG. BY: JK
CHK. BY: LFS
DRAWING NO.: L-7112
SHEET 6 OF 9

© 2014 R.W. Building Consultants Inc.

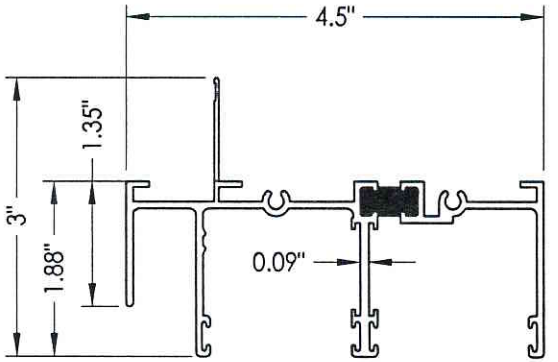

1 HEAD W/ NAIL FIN

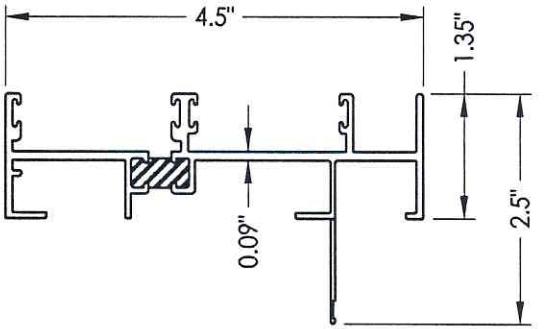

3 JAMB W/ NAIL FIN

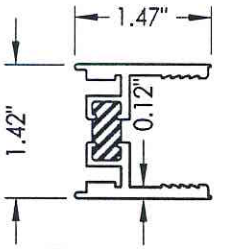

5 FIXED STILE

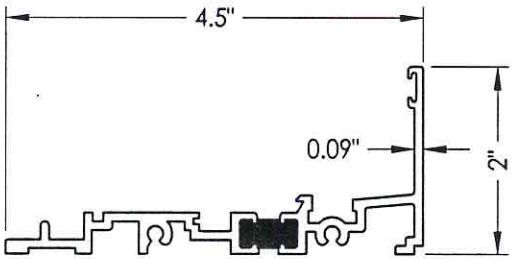

2 SILL

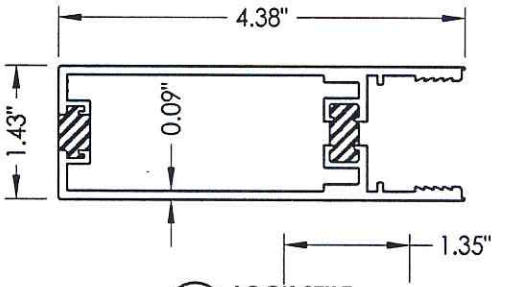

4 LOCK STILE

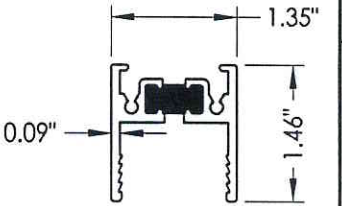

6 TOP RAIL

Testing Evaluation Laboratories Inc
Specimen Complies with Drawing
Deviations Noted - TEL # 01991914
Date 3/21/14 Verified by

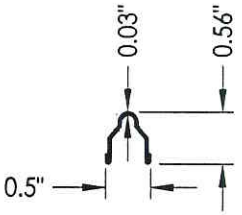

18 TRACK

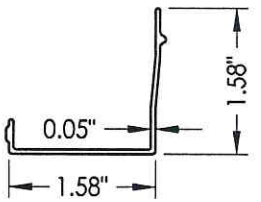

11 HEAD CHANNEL FILLER

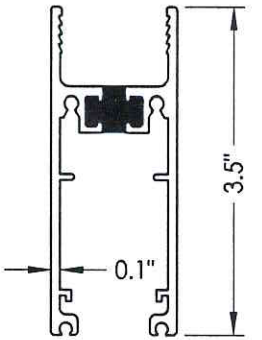

7 SLIDING BOTTOM RAIL

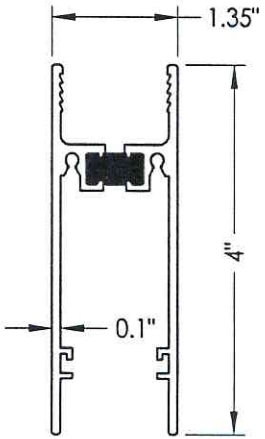

8 FIXED BOTTOM RAIL

PRODUCT: FLEETWOOD GLACIER 3300 (OOX)

PART OR ASSEMBLY: COMPONENTS

NO.	DATE	REVISIONS	BY

RW BUILDING CONSULTANTS, INC.
813.659.9197

DATE: 2/24/14
SCALE: N.T.S.
DWG. BY: JK
CHK. BY: LFS
DRAWING NO.: L-7112
SHEET 7 OF 9

© 2014 R.W. BUILDING CONSULTANTS INC.

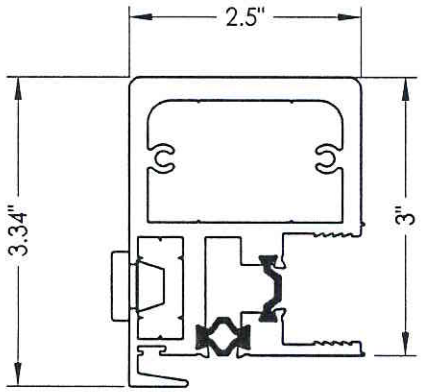

9 HP INTERLOCK

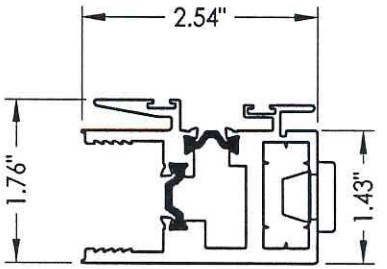

10 FIXED INTERLOCK

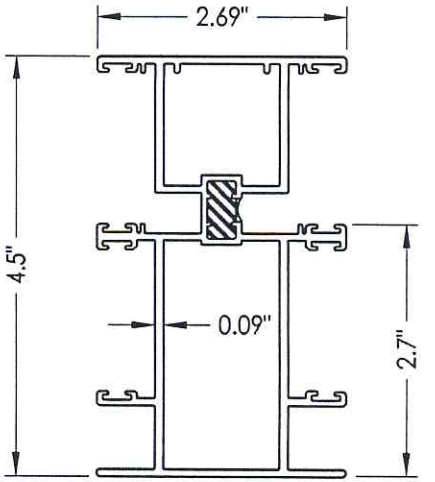

12 FALL JAMB

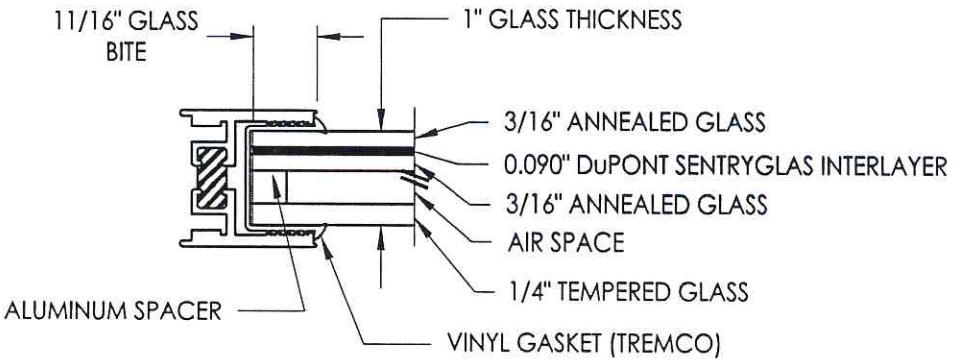

G1 GLAZING DETAIL

Testing Evaluation Laboratories Inc
Specimen Complies with Drawing
Deviations Noted - TEL # 0199-1014
Date 3/21/14 Verified by JMW

PRODUCT: FLEETWOOD GLACIER 3300 (OOX)

PART OR ASSEMBLY: COMPONENTS AND GLAZING DETAIL

NO.	DATE	BY

REVISIONS

RW BUILDING CONSULTANTS, INC.
813.659.9197

DATE: 2/24/14
SCALE: N.T.S.
DWG. BY: JK
CHK. BY: LFS
DRAWING NO.: L-7112
SHEET 8 OF 9

© 2014 R.W. BUILDING CONSULTANTS INC.

BILL OF MATERIALS

ITEM #	DESCRIPTION	MATERIAL
B	2X BUCK SG >= 0.42	WOOD
C	1/4" MAX. SHIM SPACE	-
F	#10 X 2" PPH SMS	STEEL
G	#10 X 2-1/2" PPH SMS	STEEL
H	#10 X 1" PFH SMS	STEEL
J	#8 X 3/4" PPH SELF-DRILLING SMS	STEEL
K	#10 X 3" PFH WS	STEEL
L	1/4-20 - 1/2" MACHINE SCREW	STEEL
1	HEAD W/ NAIL FIN	6063-T6 ALUM
2	SILL	6063-T6 ALUM
3	JAMB W/ NAIL FIN	6063-T6 ALUM
4	LOCK STILE	6063-T6 ALUM
5	FIXED STILE	6063-T6 ALUM
6	TOP RAIL	6063-T6 ALUM
7	SLIDING BOTTOM RAIL	6063-T6 ALUM
8	FIXED BOTTOM RAIL	6063-T6 ALUM
9	HP INTERLOCK	6063-T6 ALUM
10	FIXED INTERLOCK	6063-T6 ALUM
11	HEAD CLOSER	6063-T6 ALUM
12	FALL JAMB	6063-T6 ALUM
13	SLIDING BOTTOM RAIL WEATHER STRIP	-
14	LOCK STILE SPREADER	6063-T6 ALUM
15	BOTTOM RAIL SPREADER	6063-T6 ALUM
16	TOP RAIL ISOLATOR	6063-T6 ALUM
17	ISOLATOR	6063-T6 ALUM
18	S.S. TRACK	SS
19	2 FINGER VINYL	-
20	SMALL FINSEAL	-
21	LARGE FINSEAL	-
22	GLAZING VINYL 1" SCR-900, 80 DUROMETER	-
23	SILL ISOLATOR	6063-T6 ALUM
24	ROLLER ASSEMBLY	-
25	STRIKE PLATE ASSY.(JAMB)	-
26	LATCH ASSY.(JAMB)	-
32	3" X 4" L-BRACKETT	6063-T6 ALUM

Testing Evaluation Laboratories Inc
Specimen Complies with Drawing
Deviations Noted - TEL # 0199.1014
Date 3/31/14 Verified by JMW

PRODUCT: FLEETWOOD GLACIER 3300 (OOX)

PART OR ASSEMBLY: BILL OF MATERIALS

NO.	DATE	BY

REVISIONS

RW BUILDING CONSULTANTS, INC.
813.659.9197

DATE: 2/24/14
SCALE: N.T.S.
DWG. BY: JK
CHK. BY: LFS
DRAWING NO.: L-7112
SHEET 9 OF 9

© 2014 R.W. BUILDING CONSULTANTS INC.