TABLE OF CONTENTS

I. CARE AND MAINTENANCE 2
II. TOOLS / MATERIALS, SEALANT REQUIREMENTS, & LOAD / ANCHOR INSTRUCTIONS 2
III. ASSEMBLY AND INSTALLATION 2
IV. ARCHE-DUCT OPENING VERIFICATION (SKIP IF NO ARCHE-DUCT) 3
V. OPENING, FRAME AND PANEL VERIFICATION 4
1. Opening Verification 4
2. Pre-Fit and Leveling 4
3. Flash the Opening 4
4. Arche-Duct Water Test 5
5. Arche-Duct Install 5
6. Confirm Weeping Slots 5
7. Backfill 5

VI. FRAME ASSEMBLY 5
VII. NAIL-FIN FRAME INSTALLATION 6
VIII. BLOCK FRAME INSTALLATION 7
IX. PANEL ASSEMBLY (WHEN PANELS RECEIVED UNASSEMBLED) 8
X. FLOOR CLOSER INSTALLATION 9
XI. GLAZING INSTRUCTIONS PER GLASS (SKIP IF PANEL IS FACTORY GLAZED). 11
XII. PANEL INSTALLATION 12
XIII. FINISHED FLOORING INSTALLATION 13
XIV. FLASHING AFTER INSTALLATION 13
APPENDIX A: ARCHE-DUCT DIMENSIONAL REFERENCES 14
APPENDIX B: RIXSON ADDITIONAL REFERENCES 15
APPENDIX C: PANEL SQUARING 16
APPENDIX D: HARDWARE LOCATIONS 17
APPENDIX E: CLIC GLASS INSTALLATION 18

I. Care and Maintenance

Operational Warning: Fleetwood products operate smoothly and special care should be taken by the owner to make sure users are not injured.

This product is factory finished. Please handle with extreme care. Protect all exposed surfaces from contact with caustics, corrosives, solvents, abrasions, impacts, wet packing material etc. **FAILURE TO DO SO WILL NULLIFY THE WARRANTY**. Before **ANY CLEANING**, review the Care & Maintenance Instructions (go to www.fleetwoodusa.com for more information). **Contact the local dealer with any questions or concerns.** Fleetwood strongly recommends that all products be cleaned after installation and totally protected from construction debris and equipment.

II. Tools / Materials, Sealant Requirements, & Load / Anchor Instructions

Tools Required: Tape measure, Soft mallet, Plumb bob / line, Flat head screwdriver, Laser Level or 8' level, Shims, Nails, Screws, Sealant, caulk gun, Backer Rod, Scissors or utility knife, hex keys, drill bit, drive bit and powered drill.

Sealant Requirements

- The sealant referred to within this document for seals associated with the assembly of the product should conform to **AAMA 800**. It is recommended that all other sealants conform to **AAMA 800** but may be a sealant recommended and approved by the sealant manufacturer that is compatible with the framing, finish, and surrounding materials.
- All sealant bead sizes must conform to the sealant manufacturers' size requirements.
- The Owner / General Contractor is responsible for identifying the need for any additional sealant to be applied by others. Such sealant shall be elastomeric material, with the framing, finish and surrounding materials.

Load / Anchor Instructions

- Live or Dead Loads can affect product functionality, loads shall be designed to withstand the most critical effects of load factors and load combinations as required by building code.
- Fleetwood requires maximum vertical deflection of the header not to exceed Span/720 or 1/8"
- Structural engineer to determine anchor quantity and spacing for design load requirements.
- Review panel pressure loads and lateral force with flooring manufacturers specifications.
- Proper material must be used between all dissimilar materials (i.e. block/concrete & aluminum).

III. Assembly and Installation

General: The key to any window or door installation is preparation. This extends from storage of the product to the final installation and to all points in between. Careful planning and attention to detail can help ensure proper installation.

It is essential that each Fleetwood product be assembled and glazed in accordance with AAMA standards and factory instructions. It is the installer's responsibility to ensure that each Fleetwood product is assembled, glazed and installed and completely sealed to ensure that the product is leak-free and operates correctly**. Installation of Fleetwood products must be in accordance with the standards set forth in ASTM E 2112**. If there are any questions regarding the installation of a Fleetwood product contact the factory customer service department.

Fleetwood has provided this product with recommended field glazed weather-stripping. If the provided weather-stripping does not ensure an optimum fit of glass to frame the Fleetwood Authorized Dealer should contact Customer Service for an expedited NO CHARGE shipment of replacement weather-stripping.

IV. Arche-Duct opening verification (skip if no Arche-Duct)

Table 1: Arche-Duct Framing Dimensions

Model	A	B		C		D	E	F	G	
H40	N.F.W. + 1.00”	3.94”	6.94” Sillpan Tabs	4.25”	2.75” Sillpan Tabs	Pivot Location -1.50”	19”	A - (D+E)	8.19”	9.69” Sillpan Tabs
H28							13.63”			
Pivot Set							8.5”			

For additional dimensions see Appendix A.

Method A:

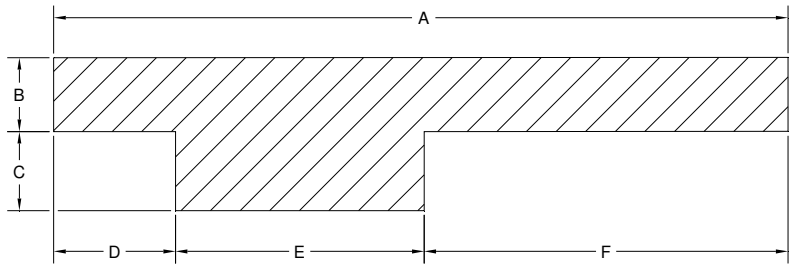

OR

Method B:

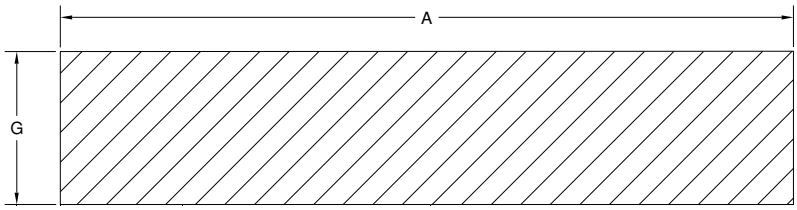

Figure 1:
Arche-Duct Framing (Top View)

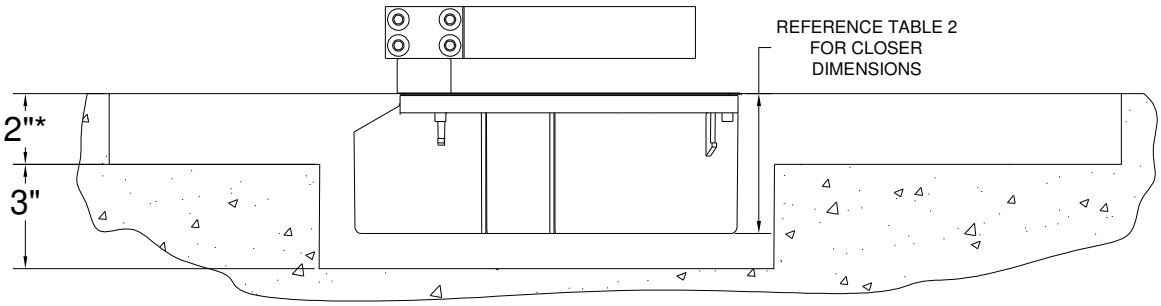

* Minimum depth required for Arche-Duct and Rixson closer. Additional depth may be required for drainage. Side drains sit $\frac{3}{16}$" below bottom of Arche-Duct

Figure 2:
Rixson Arche-Duct Opening (Side View)

V. Opening, Frame and Panel Verification

1. Opening Verification

- Check the measurements of the opening and verify that the door will fit into the opening. Measure all four sides of the opening to make sure it is 1/2" larger than the doors in width and 1/4" in height.
- Verify the opening is plumb, square, and level (Figure 3).
- Verify location / dimension Arche-Duct opening (Figure 1,2).
- Remove the frame from packaging (save all red bag items for use later) and lay it in front of the opening. Check door net frame width / height dimensions and verify pivot distance (per order).

Figure 3:
Level Locations

2. Pre-Fit and Leveling

Note: Do not leave the Arche-Duct system exposed for more than 3 months. Prolonged exposure will damage the powder coated finish.

- Place the Arche-Duct drain system into the opening and determine any leveling that must be done prior to installation (Figure 3). Prepare relief areas for the PVC drain flange(s).
- Shim as necessary to stabilize the entire depth and length of the Arche-Duct. No unsupported width of more than 8” is allowed. Shim to be load bearing, non-porous, non-absorbent and inorganic.
- If more than 1/8” shim height is required, it is recommended that pouring self-leveling “Rock Hard” (or equal) to achieve level and stable surface.

3. Flash the Opening

- Once the opening has been confirmed, flashing of the opening is required prior to Frame installation. Paper and/or liquid flashing methods are acceptable (see AAMA 711/714 for material requirements).
- Check local Building codes for any additional flashing requirements.

Paper Flashing

- At each Jamb the flashing paper should be cut at least 3” past the weep-screed or diado flashing and at least 6” above the head of the door. The flashing must wrap around the jamb and at least 3” back into the opening.
- At the Head run the flashing paper long enough to extend at least 3” past the jamb flashing and wrap around the Header at least 3” into the opening.

Liquid Flashing

- Follow the liquid flashing manufacturer instructions.

4. Arche-Duct Water Test

Note: Installer responsible for verifying the integrity of the Arche-Duct for water leakage and performance.

- Block all drain outlets and fill the Arche-Duct with water to verify the integrity of all seams and drain connections. Look for leak points, the water level of the Arche-Duct should remain constant. If the Arche-Duct passes water test, drain Arche-Duct and continue with installation of frame.

5. Arche-Duct Install

Note: Do not leave the Arche-Duct system exposed for more than 3 months. Prolonged exposure will damage the powder coated finish.

- Confirm proper orientation of Arche-Duct for tracks and drain location with customer order and/or dealer drawings.
- Install Arche-Duct into already leveled opening. An insulating material should be placed between the Arche-Duct and the supporting structure (concrete, steel, etc.) to prevent corrosion of the aluminum Arche-Duct.
- Connect tubing or pipe to Arche-Duct drain connections.

6. Confirm Weeping Slots

- Typical weep slot quantity to be 3 per single panel configuration.

7. Backfill

- Do not back-fill until door operation is fully tested, including locking into jamb(s) and locking into pocket interlocker (when applicable).
- Verify you have access to drainage connections and clean out as necessary.

VI. Frame Assembly

Note: Failure to assemble the frame according to the installation instructions, nullifies warranties related to this product.

- Apply a compatible sealant to the corners of the frame. Assemble the frame with screws provided (Figure 4).

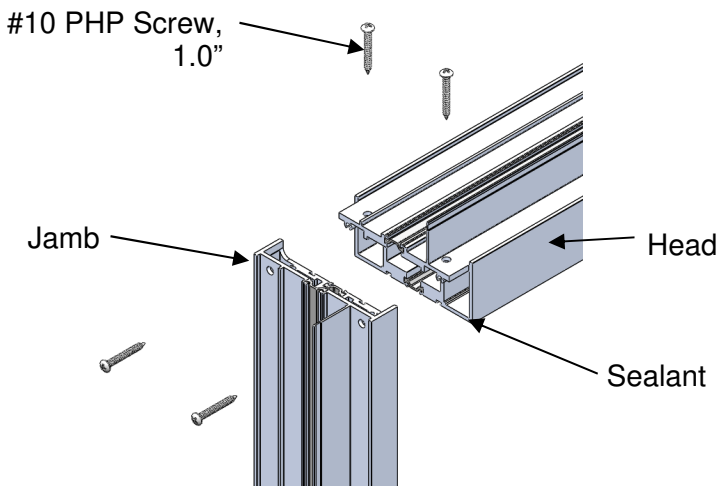

Figure 4:
Frame Assembly

VII. Nail-fin Frame Installation

Note: Fleetwood recommends the use of a laser level or 8' level for frame installations. Cross-measure within ±1/32" for interior and exterior.

1. Seal frame and vent joints completely with compatible sealant.
2. Insert the frame into the Arche-Duct. Cross-measure and adjust to achieve a plumb square and level condition. Shim where needed. Seal all fastener heads with compatible sealant.
3. Secure Top pivot to header with #10 screw min. 4" long (not by Fleetwood). See Figure 5 for illustration.

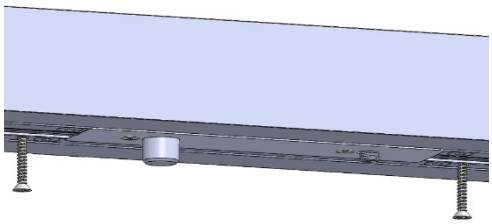

Figure 5:
Securing Top Pivot
(Nail-fin Frame Shown)

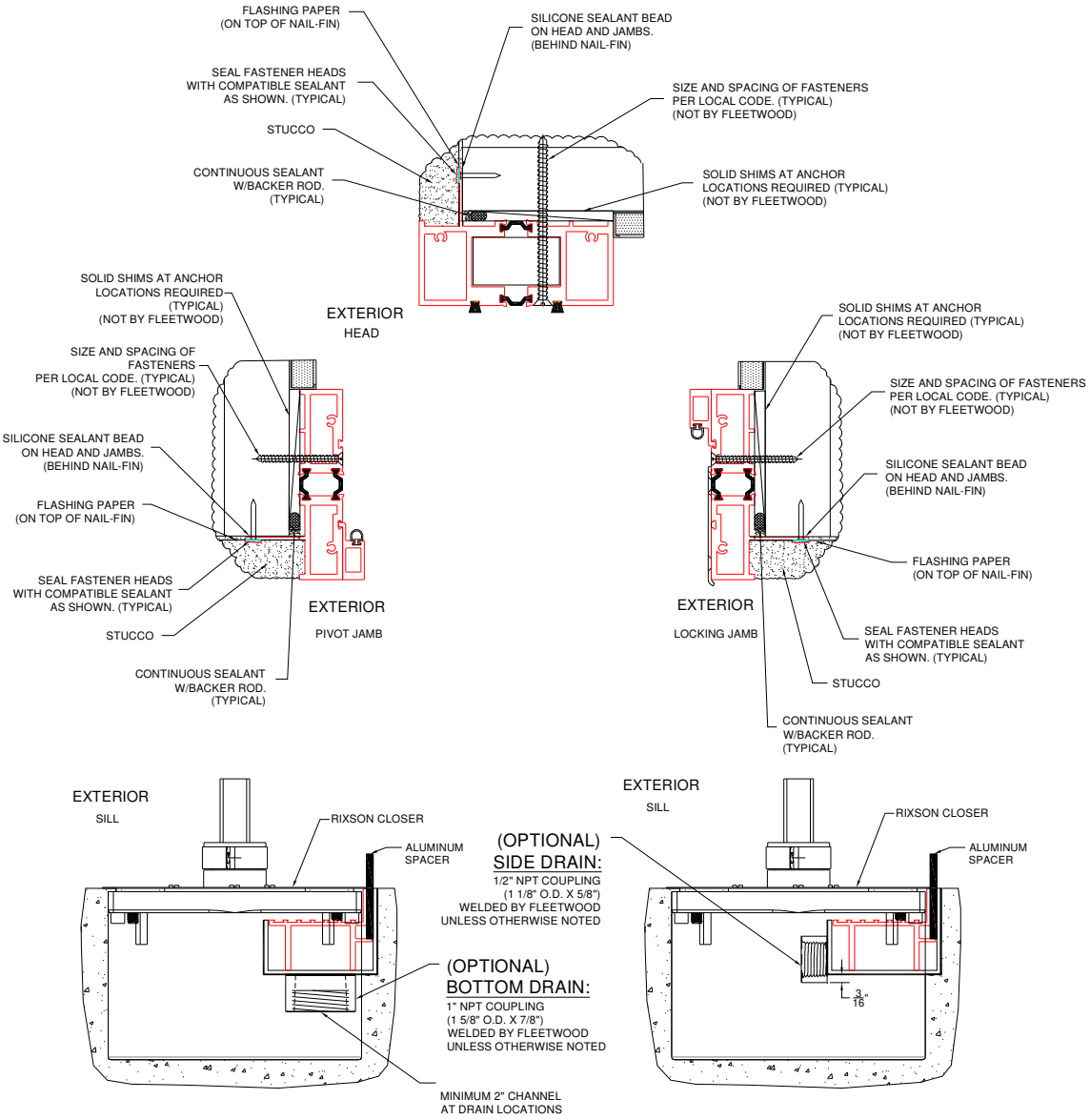

Figure 6:
Rixson Nail-fin Frame Installation

VIII. Block Frame Installation

Note: Fleetwood recommends the use of a laser level or 8' level for frame installations. Cross-measure within ±1/32" for interior and exterior.

1. Seal frame and vent joints completely with compatible sealant.
2. Insert the frame into the Arche-Duct. Cross-measure and adjust to achieve a plumb square and level condition. Shim where needed. Seal all fastener heads with compatible sealant.
3. Secure Top pivot to header with #10 screw min. 4" long (not by Fleetwood). See Figure 7 for illustration.

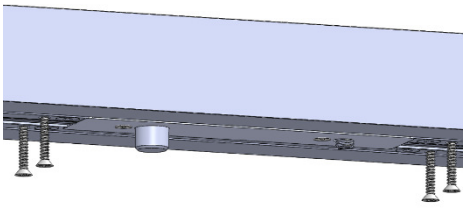

Figure 7:
Securing Top Pivot
(Block Frame Shown)

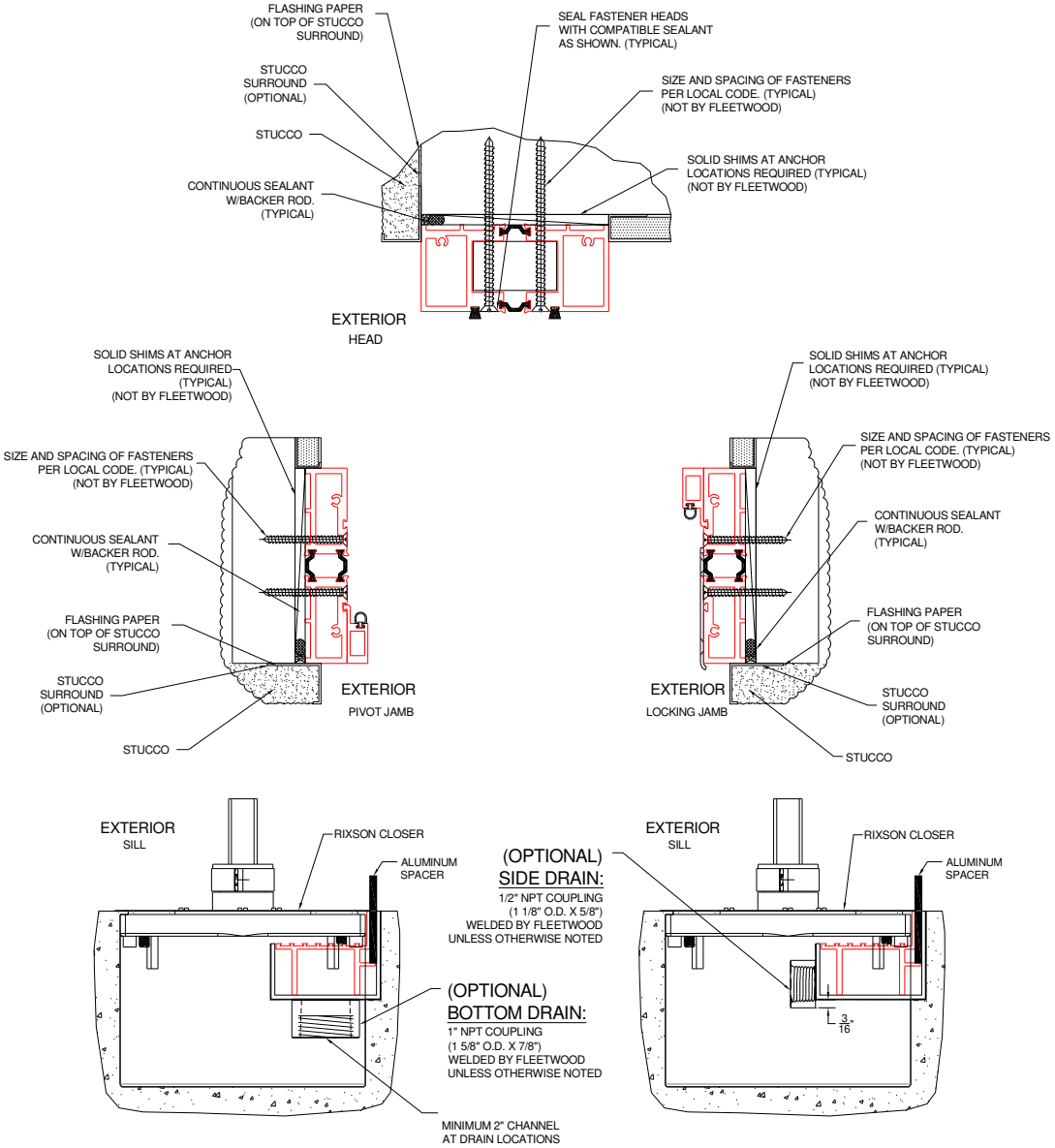

Figure 8:
Rixson Block Frame Installation

IX. Panel Assembly (when panels received unassembled)

Note: Make sure to keep individual panel components together. Match door configuration and panel orientation with customer order and/or dealer drawings. Configuration and orientation of panels shown in assembly instructions is for illustration purposes only.

- Check the red (documents enclosed) bag for keys, nuts, washers, and back-up plate (Figure 9).
- Remove glass stops from panel components. Must be field cut to fit once panel is assembled covered in Section VII for panel mounting and glazing instructions.
- On the top and bottom rails cut the bulb vinyl a 1/4" long on both ends. Cut the bulb vinyl on the vertical stiles to length where they will make contact with the inner edge of the top and bottom rails.
- Remove nut, washer, and back-up plate from the red bag.
- Apply sealant to the top and bottom rail where they make contact with the vertical stiles (Figure 10).
- Align the vertical stiles to the top and bottom rail. Place the threaded rod into the pre-drilled holes of the vertical stiles.
- Apply a small amount of high strength threadlocker to the end of the threaded rod.
- Slide the back-up plate over the threaded rod. Followed by the washer and nut (Figure 11).
- Tighten down the nut until all components are securely making contact.
- See Appendix C for panel squaring.
- Place the weather seals into the seal clips and tap the clips into place.

Figure 9:
Red Bag

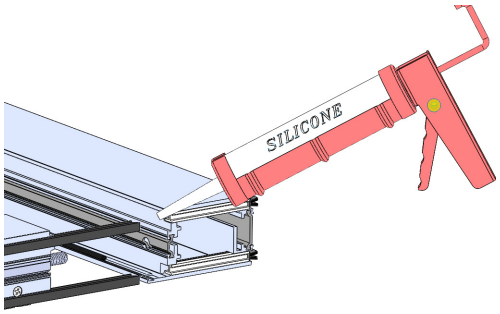

Figure 10:
Silicone Location

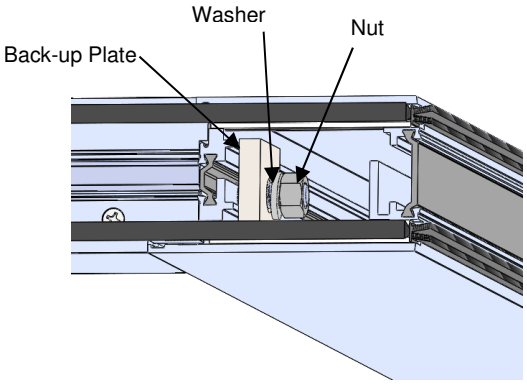

Figure 11:
Panel Assembly (Hinge Stile Shown)

X. Floor Closer Installation

1. Set the closer into the floor 2-1/16” from the back of the jamb and level (confirm with plumb line as stated in step 4). Closer is to be installed in line to the door and flush to the floor (Figure 12).
2. Measure dimension of “A” as specified from opening to the spindle center (Figure 13 & Table 2).
3. Set closer surface flush with the finished floor. Continue to step 4.

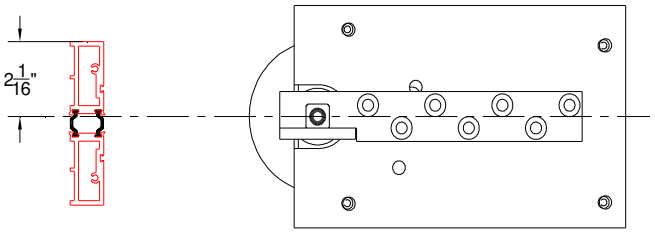

Figure 12:
Closer Positioning

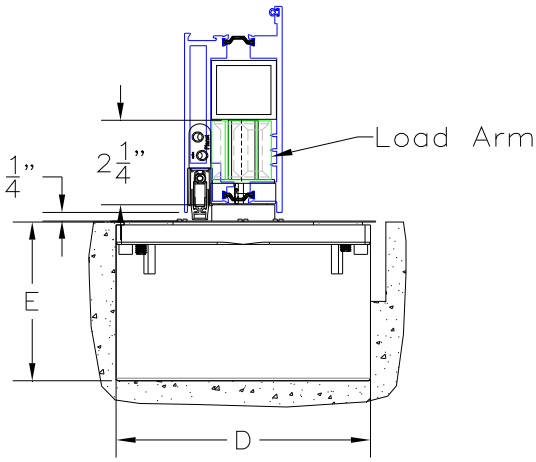

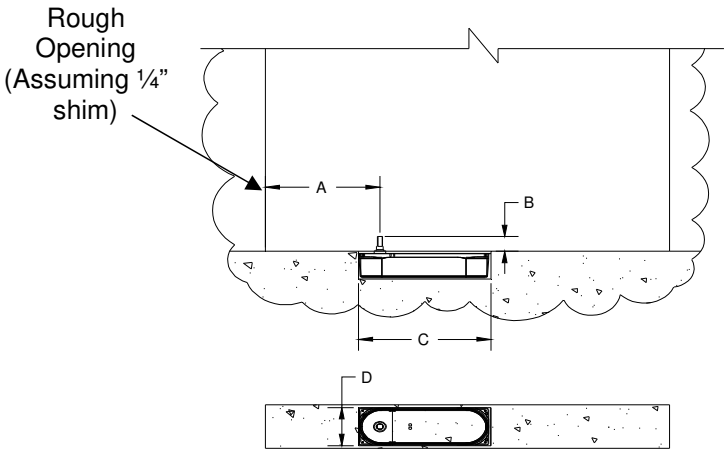

Rixson Closer H40-587 Shown.

Figure 13:
Frame, Closer, Pivot Opening

Table 2: Pivot Location, Floor Closer & Pivot Set Dimensions.

Model	A	B	C*	D*	E*
H40-587	Pivot Location + 1.25”	2.375”	17.25”	6.125”	4.063”
H28-587			11.375”	6.125”	4.063”
Pivot Set H117 3/4-587			6.5”	5.5”	2.375”

* Hole rough opening: add a minimum 1.0” around the closer (& pivot set) for cement or equivalent back fill.

4. Use a plumb line to center top pivot pin with center of closer spindle (Figure 14).

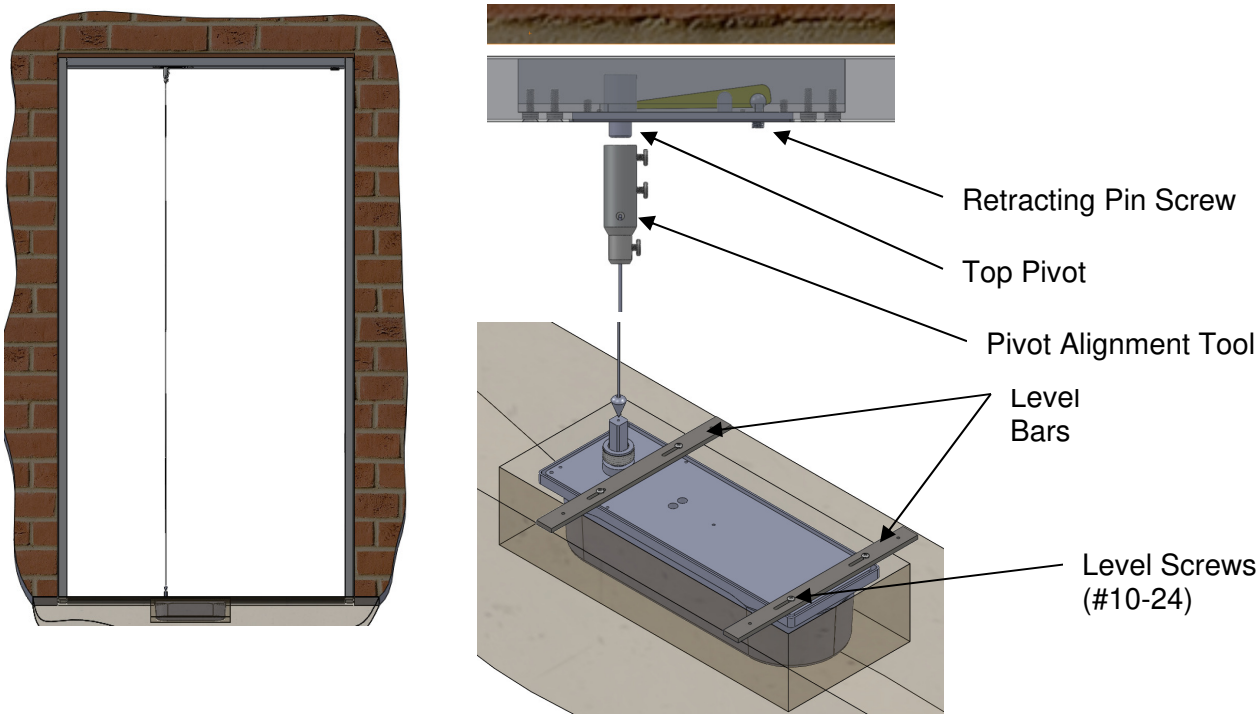

Figure 14:
In-line Verification

5. Grout in closer with cement or equivalent. Continue to Section XI when cement is cured.
6. Complete flooring around closer and Arche-Duct.
7. Install cover plates to closer.

XI. Glazing Instructions per Glass (Skip if panel is factory glazed).

1. Remove the precut glass stops from the frame, making sure to note the location from which each has been removed. Each stop is cut for a specific location and must be returned to the same location after the glazing process.
2. Before glazing, apply a 1/4”×1/4”×6” bead of compatible sealant from each corner on inner flange of panel (Figure 15).

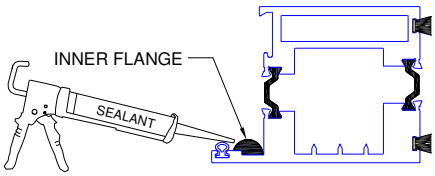

Figure 15:
Sealant Location (Top Rail Shown)

Note: For panel heights over 8 feet tall Fleetwood recommends an additional 24” of compatible sealant be applied halfway up on the vertical

3. Insert the setting blocks (red bag) according to the image that more closely resembles the product (Figure 16 or 17).
4. Stagger setting blocks accordingly to support glass lites at the bottom pivot location.
5. Insert glass into panel.
6. Cross-measure to ensure the panel is square. See Appendix A for troubleshooting tip on how to square the panel.
7. Finish assembly by inserting the two horizontal glass stops then install the two vertical glass stops.

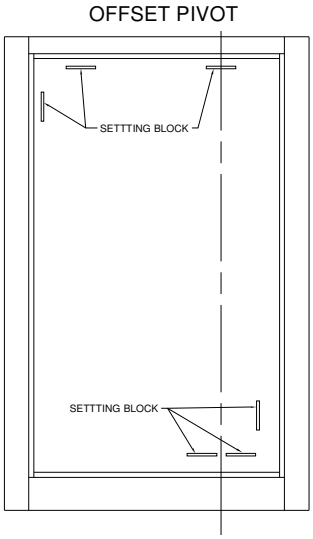

Figure 16:
Offset Pivot Location Setting Blocks
(Pivot Location Right Shown)

Alternate Glazing Procedure

Note: Applies to inside glazed or outside glazed product(s) where additional water protection is required. Including areas where snow accumulation and subsequent melting/freezing may cause thermal bridging.

1. Apply a continuous 1/4”×1/4” bead of sealant before glazing. (Figure 15).
2. Insert the setting blocks (red bag) according to the image that more closely resembles the product (Figure 16 or 17).
3. Stagger setting blocks accordingly to support glass lites at the bottom pivot location.
4. Insert glass into panel.
5. Cross-measure to ensure the panel is square. See Appendix C for troubleshooting tip on how to square the panel.
6. Insert the two horizontal glass stops then install the two vertical glass stops.
7. Apply a bead of continuous compatible sealant along the glass and glass stop edge, minimum 18” up the sides.

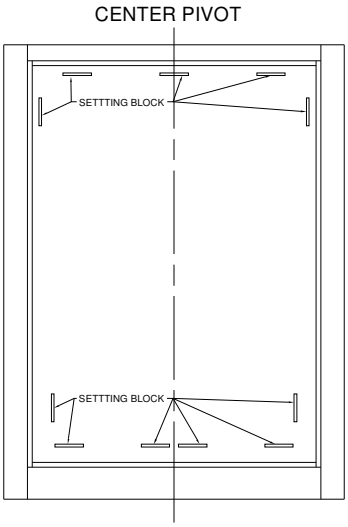

Figure 17:
Center Pivot Location Setting Blocks

XII. Panel Installation

- **Closing Speed Adjustment** see Appendix B.
- **Panel Squaring** (troubleshooting tip) see Appendix C.
- **Handle Pull Installation** see Appendix D.

1. Retract top pivot pin by turning retracting pin screw counterclockwise (Figure 18). Install washer & thrust bearing to spindle (Figure 19).
2. With the floor closer in the slowest settings use a crescent wrench to turn the pivot perpendicular to the frame.
3. Tilt door to place on spindle and attach arm end block but do not tighten (Figure 19).
4. Align the two portions of top pivot and turn pin retracting screw clockwise (Figure 18).
5. Tighten arm end blocks screws and install load arm cover plate.
6. If the panel is hitting the head or sill see Appendix C: Panel Squaring.
7. The installer is responsible for the integrity of all framing joints after installation and must therefore water test all joints to guarantee a completely sealed product. Apply joint sealer and/or sealant necessary to ensure watertight joints. Retest as necessary.
8. To complete the panel installation, apply backer rod and a complete bed of sealant to the entire exterior and interior joint between the frame and the building structure. Tool the sealant to eliminate bubbles, voids and / or breaks and ensure a completely watertight seal (Figure 6,8).

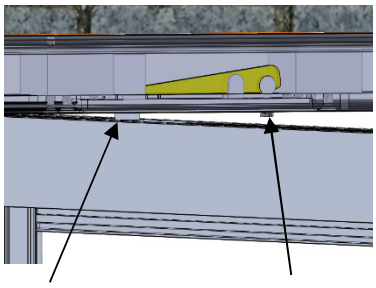

Figure 18:
Top Pivot Locking

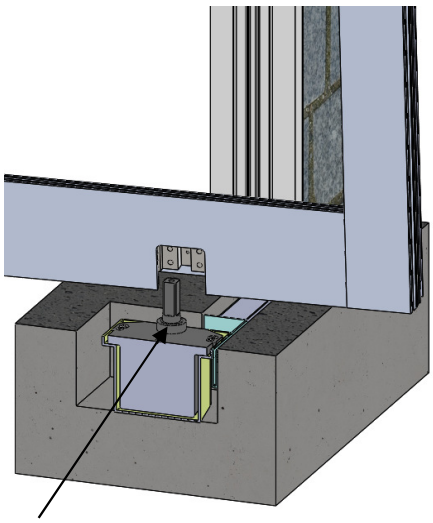

Figure 19:
Washer Location

XIII. Finished Flooring Installation

Flooring Material: The sill for this product was designed to incorporate the finished flooring as a key component to the bottom rail sealing and the linear slot drain. The material chosen to surround the extruded sill should be such that water will not damage it.

Linear Slot drain: The sill comes with an aluminum spacer to ensure the linear slot drain spacing is correct. This spacer is to be removed after the flooring is installed.

XIV. Flashing after Installation

The flashing paper referred to in this document is Moistop or other code compliant flashing material that conforms to **Federal Specification UU-B-790a, Type 1, Grade A, Style 4**. The strips of flashing paper are to be no less than 9 inches wide (or wider as required by local codes). Flashing paper must be applied with galvanized nails or corrosion resistant staples. Flashing paper shall be applied in a weatherboard fashion around the full perimeter of the framed opening.

1. Once satisfied that the frame is water tight, and immediately prior to application of the flashing paper at the head and jambs, apply a continuous bead of sealant to the exposed mounting flange (nail-fin) at the top (head) and sides (jambs) of the installed frame. Also, apply sealant at corners of the frame, the full length of the seams where the nail fin flashing is mounted.
2. At each jamb, embed the flashing paper into the sealant onto mounting flange and fasten into place. The flashing paper should be cut sufficiently long enough to extend at least 3” past the weep-screed or diado flashing and at least 6 inches above the head of the window (Figure 20).
3. Finally, at the head, embed the flashing into the sealant on the mounting flange and fasten into place. The flashing paper should be cut sufficiently long enough to extend past the flashing paper at each jamb by at least 3” (Figure 21).
4. Weather resistant building paper should be applied in a weatherboard fashion to complete the installation (Figure 22).

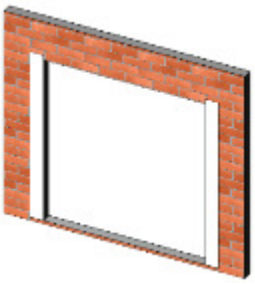

Figure 20:
Jamb flashing

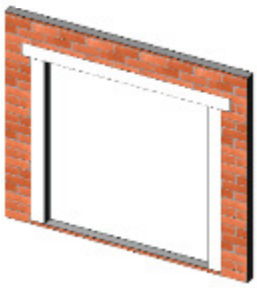

Figure 21:
Head Flashing

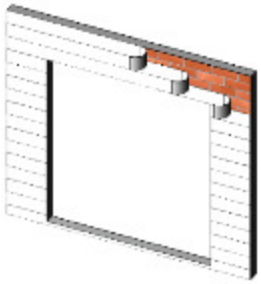

Figure 22:
Building Flashing

Note: Where weather resistant building paper, insulating board, or other materials by other trades may constitute the primary weather barrier behind the exterior wall finish (i.e. stucco, masonry, siding, etc.), the owner / General Contractor are responsible to ensure that the weather barrier is continuous by effectively sealing the material to the window frame.

Appendix A: Arche-Duct Dimensional References

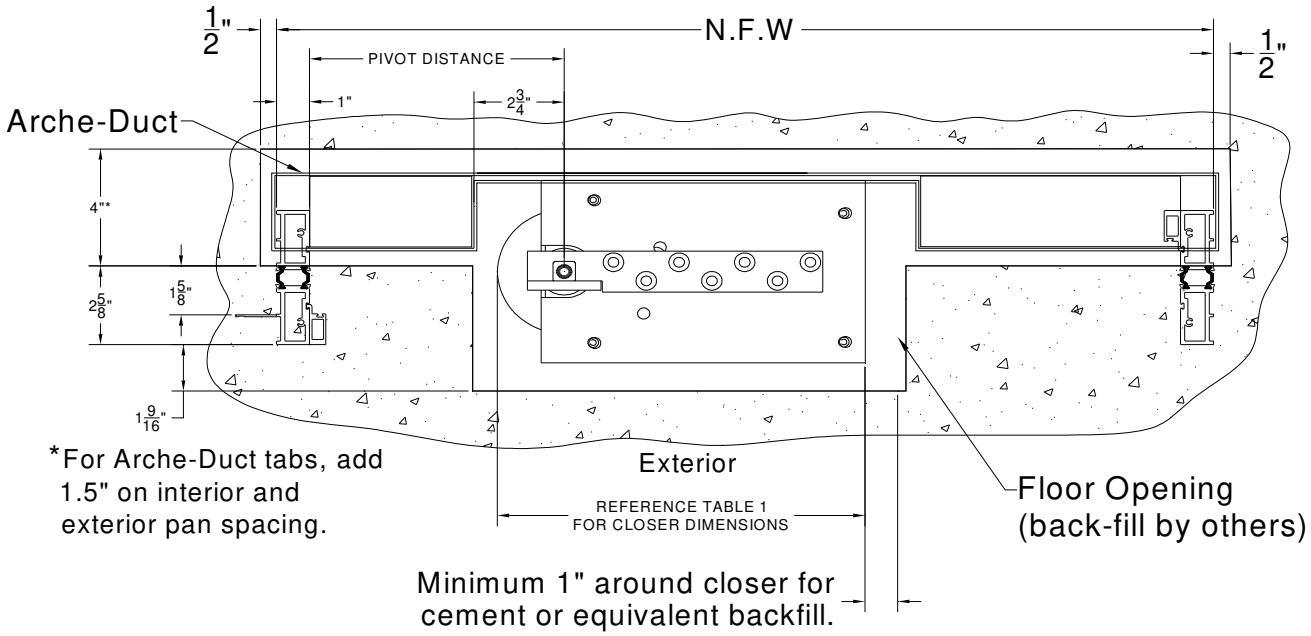

Figure A1:
Rixson Arche-Duct Opening

Appendix B: Rixson Additional References

Sample installation instruction video:
https://www.youtube.com/watch?v=9bOtpwgSsuQ&feature=youtu.be

Replacing A Rixson Floor Closer
https://www.youtube.com/watch?v=aKwpdBrH9-M&feature=youtu.be

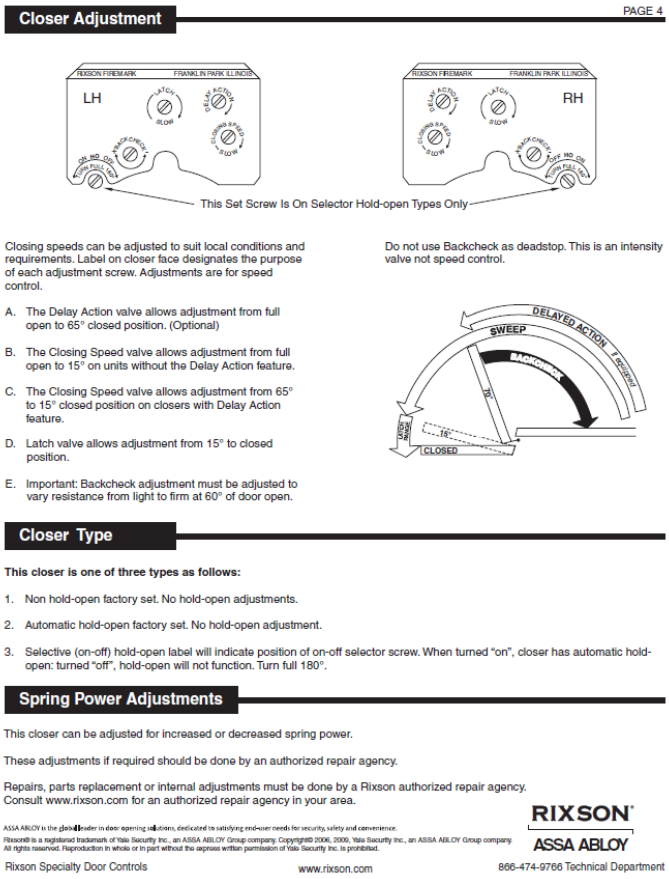

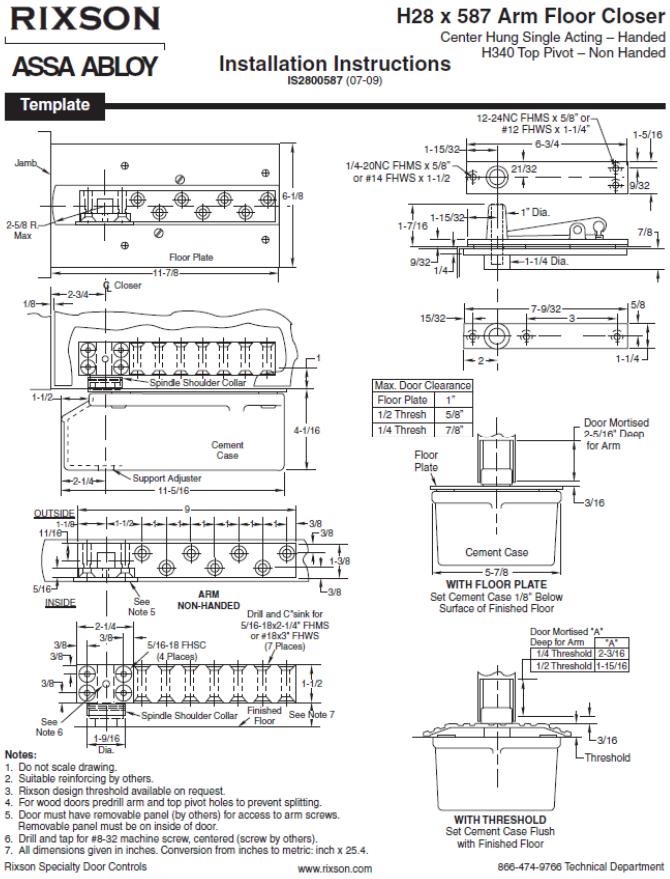

Figure B1:
Rixson Closer Adjustments

Appendix C: Panel Squaring

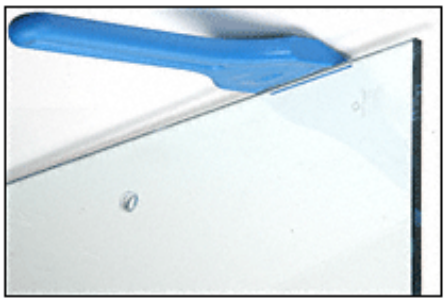

Figure C1:
Glass Lifting Tool

Required Tools: 9/16” wrench, pliers, tape measure, shim, plate glass lifting tool.

1. If panel hits the sill due to the weight of glass/panel.
   a. Make sure the frame is squared before any adjustments to the panel.
   b. If the problem is solved, stop here.
   c. Lay panel on table and check distance of both diagonals. If they are not the same, the panel is not square.
   d. Loosen nuts at 4 corners (2 turns), use plate glass lifting tool and add additional shim(s) to the top of the panel opposite of the pivot, between the glass and vent top rail.
   e. Check diagonal distances, gap of panel to frame.
   f. Tighten corner key nuts.
2. If panel hits the head.
   a. Make sure the frame is squared before any adjustment to panel.
   b. If the problem is solved, stop here.
   c. Lay panel on table and check distance of both diagonals. If they are not the same, the panel is not square.
   d. Loosen nuts at 2 top corners (2 turns), use plate glass lifting tool and remove/replace current shims with thinner shims to the top of the panel opposite of the pivot, between the glass and vent top rail.
   e. Check diagonal distances, gap of panel to frame.
   f. Tighten corner key nuts.

Appendix D: Hardware Locations

The following are latching hardware locations to avoid when installing **surface mount handle pulls**.

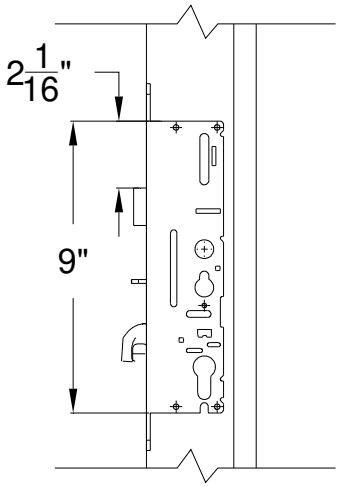

Figure B1:
2 Point Latch

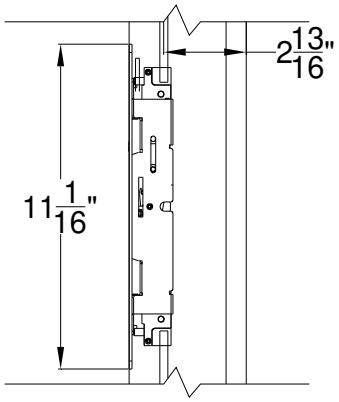

Figure B3:
Inactive Panel Shoot-bolts

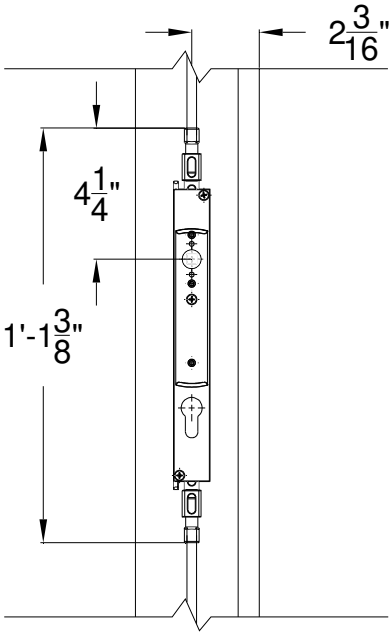

Figure B2:
DPL

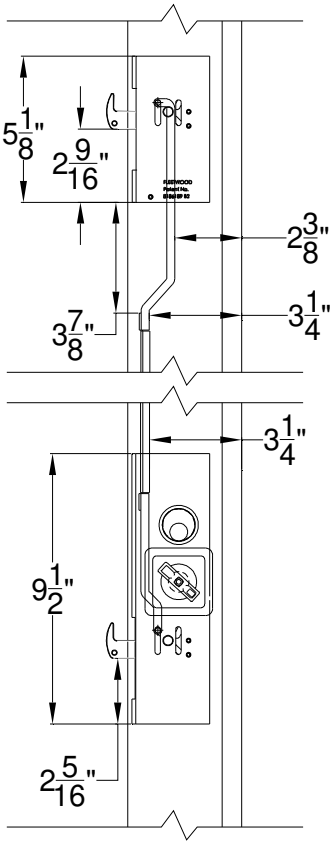

Figure B4:
Archetype Latch and Secondary Latch

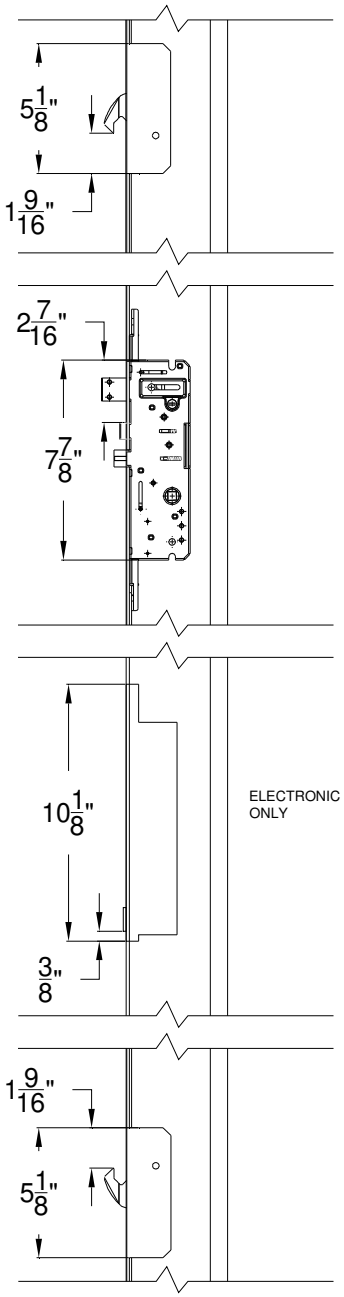

Figure B5:
5 Point Latch / Electronic Latch

Appendix E: CLiC Glass Installation

Fleetwood offers CLiC on demand Privacy Glass as a glazing option. This type of glazing option requires power to be run to each lite using cardinals proprietary glass controller. Depending on the type of product ordered, the wire leads locations will vary. Please ask at the time of purchase to confirm where these leads will be located so assist in preparing the opening accordingly.

Below are links to CLiC glass specific installation instructions:

Quick Start Guide

Installation Manual

Technical Data Sheet