FLEETWOOD
WINDOWS & DOORS
FleetwoodUSA.com

NORWOOD 3070EX M/S

90°PXIXP CUSTOM CONFIG.

NO SCREENS

ORDER NO.:

ITEM NO.:

0 1 2 3 4 5 6

(USE RULER TO SCALE DIMENSIONS IN INCHES)

SCALE: 1/4

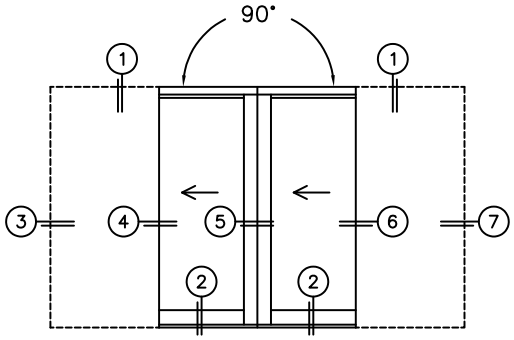

PXIXP DOOR SHOWN

REQUIRED DEALER INFO.	
A (DAYLIGHT WIDTH)	
B (DAYLIGHT WIDTH)	
C (NET FRAME HEIGHT)	
SILL PAN HEIGHT(INTERIOR LEG) (3/4", 1-1/16", 1-7/16" OR 1-7/8")	

CALCULATED VALUES (FLEETWOOD SUPPLIED)	
D (POCKET WIDTH)	
E (NET FRAME WIDTH)	
F (POCKET WIDTH)	
G (NET FRAME WIDTH)	

NOTES:

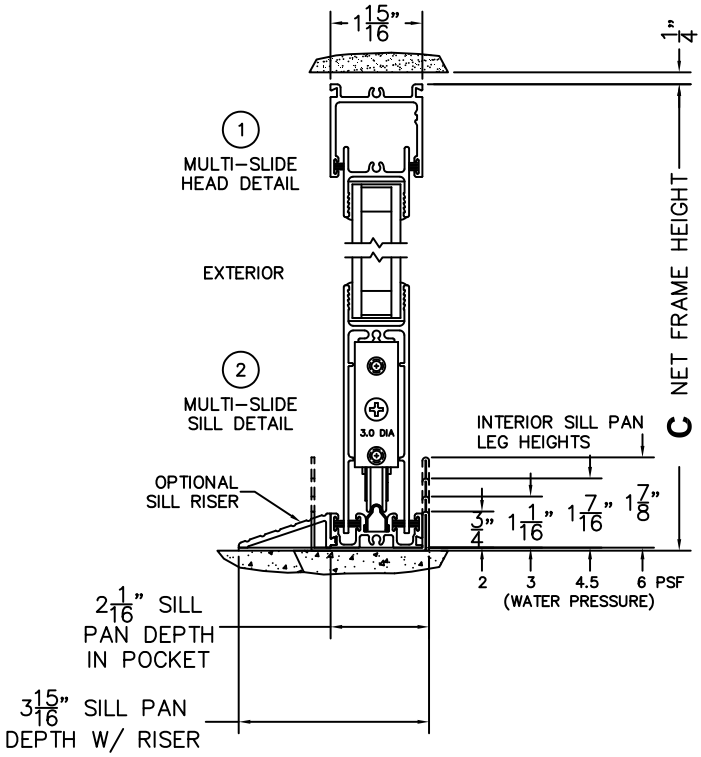

DWG NO.: 3070-EX-90PXIXP-NSO-IS-MS-STI-HE-DN-AN-PEN-PJN-PI2-S1	SHEET: 1 OF 2	CUSTOMER SIGNATURE	DATE:

FLEETWOOD WINDOWS & DOORS FleetwoodUSA.com	NORWOOD 3070EX M/S 90°PXIXP CUSTOM CONFIG. NO SCREENS	ORDER NO.: ITEM NO.:

0 1 2 3 4 5 6

(USE RULER TO SCALE DIMENSIONS IN INCHES)

SCALE: 1/4

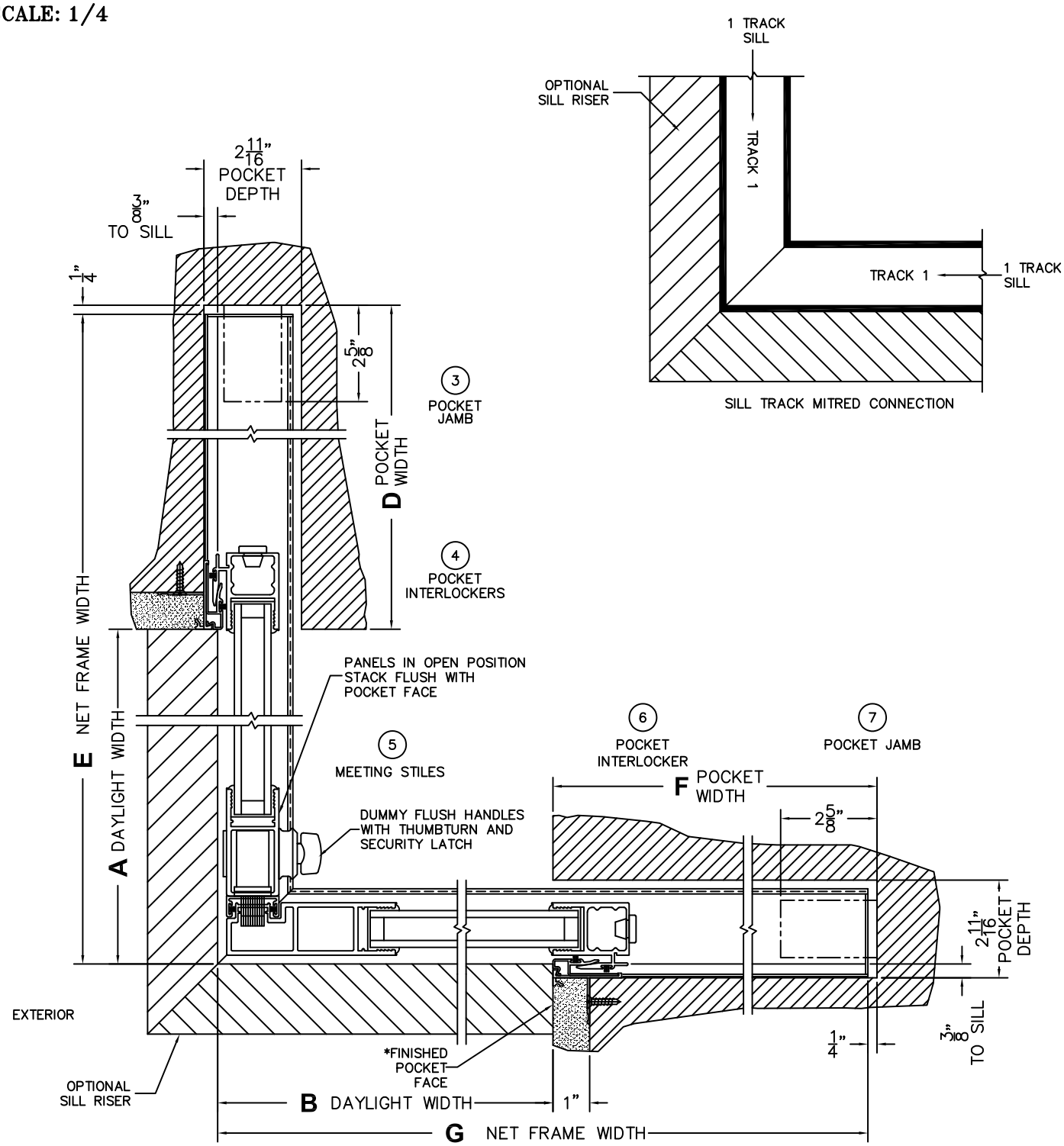

*CAUTION: WHEN CONSTRUCTING POCKET NOTE THAT DAYLIGHT WIDTH DOES NOT INCLUDE 1" SET BACK FOR POST INTERLOCKER.

DWG NO.: 3070-EX-90PXIXP-NSO-IS-MS-STI-HE-DN-AN-PEN-PJN-PIS2	SHEET: 2 OF 2	CUSTOMER SIGNATURE	DATE: